ROOFING AND WATERPROOFING SYSTEMS

POLYGLASS Q

MAPEI GROUP

TECHNICAL guide

for Commercial and Residential Roofing Systems

POLYGLASS®
is committed to
adding value
by producing
cutting edge
products which
meet or exceed
the needs of our
customers. Our
goal is to provide
a professional
experience,
focusing on
quality products
and efficient
service, while
meeting the
objectives of our
shareholders and
employees.

Table Of Contents

Company Overview & History 2

Products & Innovations 6

Commercial Roofing Simplified 17

Policy Statement 20

Product Range

Self-Adhesive Membranes with ADESO® Technology 22
APP Membranes 24
SBS Membranes 26
Polystick® Roof Underlayments 28
Base, Felt & Synthetic Membranes 28
Quick ASTM Product Reference 30
Color Guide 31

General Requirements & Design Criteria

General Requirements 33
Requirements for Roof Decks 36
Requirements for Thermal Insulation 37
Membrane Installation 38
Slope and Fastening Requirements 42
Re-cover or Re-roofing 42
Test Approvals and Classifications 43
Polyglass Tiered Contractor Program 43
Polyglass Warranty Program 43

Guide Specifications

Online Specification Generators 44
1-Ply Roof Systems 45
2-Ply Roof Systems 47
3-Ply Roof Systems 52

Roofing Details

Roofing Details 56

*While all information printed in this guide is accurate at time of publication, such information may change at any time with or without notice. For the most up to date information and data, please visit our website at Polyglass.us.

About Polyglass

Polyglass is an ISO 9001:2015 Certified, leading manufacturer of modified bitumen roofing and waterproofing membranes and roof coatings for low- and steep-slope applications with over 25 years of experience in North America. Committed to adding value through innovation, Polyglass utilizes the most technologically advanced manufacturing process in the industry with six state-of-the-art manufacturing facilities- five in North America and one in Italy which services all of Europe.

Since 2008, Polyglass has been a part of the Mapei® Group, a multi-billion dollar manufacturer in the building industry with over 31 research centers and more than 81 production facilities in 35 countries.

Polyglass prides itself in innovative and quality roofing products which exceed the needs and expectations of its customers all around the world. This commitment is demonstrated daily by the people that work for Polyglass where the customers' needs always come first.

Research & Development

As a leading company in the modified bitumen membrane waterproofing and roofing products category, Polyglass has consistently innovated throughout its history. Our patent portfolio includes but not limited to: "ADESO®" - a groundbreaking self-adhered, dual-compound membrane, "SEALLap® ULTRA" - an enhanced bonding method for self-adhered membranes, and "Polyfresko®" an unsurpassed energy savings membrane that delivers exceptional solar reflectance.

Our multidisciplinary Research & Development team is comprised of Ph.Ds., chemists, material scientists and chemical, civil and mechanical engineers that interact with other departments to play a critical role in the development of new products, processes, innovations and ideas. R&D contributes to achieving our company's goals through the optimization of the manufacturing process, by implementing cost effective and improved installation techniques and by controlling the selection and approval of raw materials ensuring our customers receive quality products at an exceptional value that meet and exceed environmental, health and safety regulations.

The Research & Development department embraces and understands the many difficulties of meeting the demands of the building and waterproofing industries and is well equipped to meet these future challenges. Our research laboratories are equipped with cutting edge analytical and physical testing equipment to push the boundaries in the development of novel and innovative products and technologies that better serve our customer's needs and expectations.

Customer Care

Polyglass values its customers and is in constant search of ways to improve products and services. Positioned in five manufacturing locations across the United States, Polyglass is able to service most of the country in just a few days. This access to quality inventory coupled with our team of trained Technical Representatives available for onsite support provides uncompromised service that customers can depend on.

1. **DEERFIELD BEACH, FL**
   POLYGLASS USA, INC.
   North American Headquarters
2. **FERNLEY, NV**
   Manufacturing Facility
3. **PHOENIX, AZ**
   Manufacturing Facility
4. **HAZLETON, PA**
   Manufacturing Facility
5. **WINTER HAVEN, FL**
   Manufacturing Facility
6. **WACO, TX**
   Manufacturing Facility
7. **PONTE DI PIAVE, ITALY**
   Polyglass SpA
   European Headquarters

Polyglass History

POLYGLASS S.P.A.

Starting as roofing contractors, brothers Luigi, Romano and Antonio Zanchetta realized on the job that there was a need for roofing products that were more contractor-friendly. After years in the field, the Zanchettas decided to put their beliefs into action and created their first compound formulation. Joining "Poly" from polymer and "Glass" from fiberglass - two elements that were in their products, the name Polyglass was born.

In 1972, Polyglass' first plant was built in Ponte di Piave, a town just north of Venice, Italy. The location was chosen because it was home to the Zanchetta family.

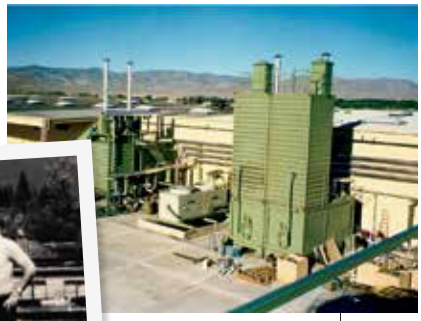

The start of the 1980s was an exciting time for Polyglass as Romano decided to venture into the United States business opportunity. With the growth of Europe's business, it was a natural progression to expand abroad.

In the late 1980s, Polyglass made a small investment into West America Membranes which had a manufacturing facility in Fernley, NV. The company ceased operations allowing Polyglass to buy the plant and its contents.

1997 marked 25 years since Polyglass entered the roofing manufacturing business and celebrated by bringing all of its sales reps from the U.S. to Italy to show off the company's roots.

1997 also marked the year that Polyglass opened its second U.S. manufacturing plant in Hazleton, PA.

1960

1970

By the mid-1970s, two production lines were up and running, producing modified bitumen roofing membranes. Business grew from Italy to the surrounding countries.

1980

By the mid-1980s, American Roofing Corporation was distributing Polyglass product in the mid-western United States with great success.

1990

After buying the manufacturing plant in Fernley, Polyglass made it its own by bringing its knowledge of building state-of-the-art manufacturing equipment to make top quality products. Polyglass' first U.S. facility and headquarters was opened in 1992.

At the end of the 1990s, Polyglass modified its logo by incorporating the Q behind the company name. Q, standing for quality, was the recognition of Polyglass SpA achieving ISO 9001.

At the same time, Polyglass introduced the first self-adhesive membrane in the United States - creating a new product category within the Asphalt Roofing Manufacturers Association (ARMA).

At the turn of the century, Polyglass SpA experienced significant growth, opening multiple distribution points with main locations in Great Britain and Romania.

To support this growth, Polyglass SpA expanded its operations in Ponte di Piave.

In 2007, Polyglass opened the doors of its third U.S. plant in Winter Haven, FL. The following year Polyglass introduced coatings to its product offering. Manufacturing its own coatings, cements, mastics, reflective coatings and elastomeric coatings, Polyglass applies the same commitment to quality to this product category.

Polyglass moved its U.S. headquarters to Deerfield Beach, FL in 2010.

With three plants across the U.S., Polyglass continues to develop its ability to service the Americas. That combined with its strong European operations, Polyglass is a global company that provides quality roofing products featuring cutting-edge technology.

In 2016, CISQ/CERTIQUALITY S.r.l. recognizes Polyglass for its Quality Management System Meeting ISO 9001:2015 Standard for the Design, Manufacture and Sales of Modified Bitumen Roofing and Waterproofing Membranes, Coatings, Adhesives and Sealants.

ISO 9001 2015 CERTIFIED

Polyglass U.S.A., Inc. celebrates 25 years of manufacturing premium roof products in the U.S., serving the North America market.

1992 25 2017

2000

In 2003, Polyglass revolutionized the roofing industry by manufacturing its self-adhered membranes with its patented ADESO® Technology. A dual-compound formulation, it allows the contractor to have multiple surface options on an aggressive self adhesive bottom layer.

ADESO® SELF-ADHERED TECHNOLOGY

In 2008, the Mapei Group acquired Polyglass. A company heavily focused on product research and development, Mapei has been in the building materials industry for over 75 years and is owned by an Italian family making it a natural fit for Polyglass.

MAPEI

2010

CURE technology®

Polyglass launches its most recent technology to the roofing industry, CURE Technology®. This innovative, patented technology features infused ceramic microspheres, ultraviolet stabilizers and proprietary resins resulting in a longer-lasting, environmentally-friendly, higher quality modified bitumen membrane.

In 2017, Polyglass U.S.A., Inc. opened its fifth manufacturing plant in Waco, TX.

In 2014, Polyglass U.S.A., Inc. acquired KM Coatings to increase its footprint in manufacturing roof coatings. The acquisition resulted in a fourth U.S. manufacturing facility in Phoenix, AZ.

PRESENT

In 2019, Polyglass introduces Turbo-Set, an innovative two-component, water based, liquid applied roofing system. Featuring our Blue Cure Technology additive which speeds up drying and cure time.

TURBO SET®

2019 Polyglass announces SEALLap® ULTRA - The next generation of SEALLap Technology. The newly redesigned manufacturing process that applies self-adhesive (SA) compound to the side lap of the membrane, for an instant bond, tested stronger than all other application methods.

SEALLap® ULTRA
U.S. PATENT PENDING

Polyglass Products

ADESO® Self-Adhered Membranes

Polyglass created this product category and has continued to improve its manufacturing process to stay ahead of the competition. The new generation of Self-Adhered (SA) membranes manufactured with patented ADESO® Technology is the most innovative modified bitumen roofing product available in the industry. Polyglass' SA membranes are unique in utilizing patented dual-compound, self-adhesive technology; a granule-free end lap, FASTLap®, and a self-adhesive compound in the side lap, SEALLap® ULTRA. A proven performing roof system, Polyglass' SA membranes install quickly, are clean and provide a long-lasting and durable roof covering. The latest additions to this family of products, Elastoflex SA V Polar Base and Elastoflex SA P Polar Cap, can be applied in temperatures as low as 30° F.

Modified Cements & Adhesives

Polyglass' Modified Cements & Adhesives are ideal for use with SBS modified bitumen roof membranes as a cold-applied adhesive and are specially formulated to be compatible with Polyglass roofing membranes.

Silicone Roof Coatings

Polyglass silicone coatings provide a highly-reflective, seamless, flexible and durable solution for roof restoration. Approved for most substrate applications.

POLYSTICK® Self-Adhered Underlayments

The Polystick family of self-adhered underlayments offers many options for varying roofing applications and all are manufactured utilizing ADESO® Technology. Featuring Multiple Surfacing Solutions, which is an application of customized surfaces providing a wide array of roofing solutions, Polystick top surfaces are high strength, anti-skid, film laminate or high temperature resistant fabric, or specially treated granules. Polystick underlayments are reinforced with fiberglass or polyester carrier mats and include a unique factory-applied side lap treatment, SEALLap®.

Conventional Mod Bit Membranes

Polyglass offers a wide variety of Atactic Polypropylene (APP), and Styrene-Butadiene-Styrene (SBS), modified asphalt, roofing membranes, reinforced with polyester and/or fiberglass mat offering excellent tensile strength and dimensional stability. These modified bitumen membranes are available in a variety of installation methods to best suit your application, including heat welding, hot asphalt and cold-applied adhesion.

Kool Roof Solutions & Acrylic Roof Coatings

Dedicated to producing products that will help lower energy costs in buildings, Polyglass manufactures several options for your cool roofing needs. All products are ENERGY STAR® certified, CRRC (Cool Roof Rating Council) rated and can be used to comply with 2016 Title 24 Part 6 Cool Roof Requirements. These products have incredible reflectivity and emissivity and will stand the test of time.

Kool Roof Solutions™

Turbo-Set®

Accelerate roof coating installation time while reducing labor cost with Turbo-Set. Developed by Polyglass U.S.A., Inc., Turbo-Set is a two-component water-based liquid membrane system that features our Blue Cure Technology™ additive to speed up drying and cure time. Spray applied in a single coat, this system uses state-of-the-art proprietary equipment to create a monolithic roof system over a variety of substrates.

TURBO SET®

Innovations

What is ADESO Technology?

ADESO Technology revolutionized the modified bitumen industry by manufacturing dual-compound self-adhered (SA) membranes using a true APP or SBS formulation on the top weathering side and an aggressive self-adhered formulation on the bottom side of the reinforcement. ADESO Technology integrates patented features that enhance lap sealing and allows product design with a variety of customized surfaces.

Feature & Benefits

- Labor savings with fast and clean installation
- Safe, no open flame application
- Superior watertight sealing
- Versatile roof systems for commercial and residential projects
- Long-term warranty protection
- Adheres to a variety of substrates
- Polyester or fiberglass reinforced

Dual Compound

Combines a true APP or SBS compound top weathering surface with an aggressive self-adhesive compound on the bottom surface.

SEALLap® ULTRA

Instant side lap bond, tested stronger than all other application methods. This SA to SA bond provides a completely monolithic seal.

Multiple Surface Solutions

Provides solution for any roofing system need, allows a wide variety of surfacing options

FASTLap®

Save time and labor with granule free end laps.

Competitor Granulated Cap Sheet

Polyglass FASTLap Granule Free End Laps

Product List

Polyflex SA Base
Polyflex SA P
Polyflex SA P FR
Polyfresko G SA
Polyfresko G SA FR

Elastobase SA
Elastoflex SA V
Elastoflex SA V FR
Elastoflex SA V Plus
Elastoflex SA V Plus FR
Elastoflex SA V Flashing Strips

Elastoflex SA V Polar Base
Elastoflex SA P
Elastoflex SA P FR
Elastoflex SA P Polar Cap
Polyfresko G SBS SA
Polyfresko G SBS SA FR

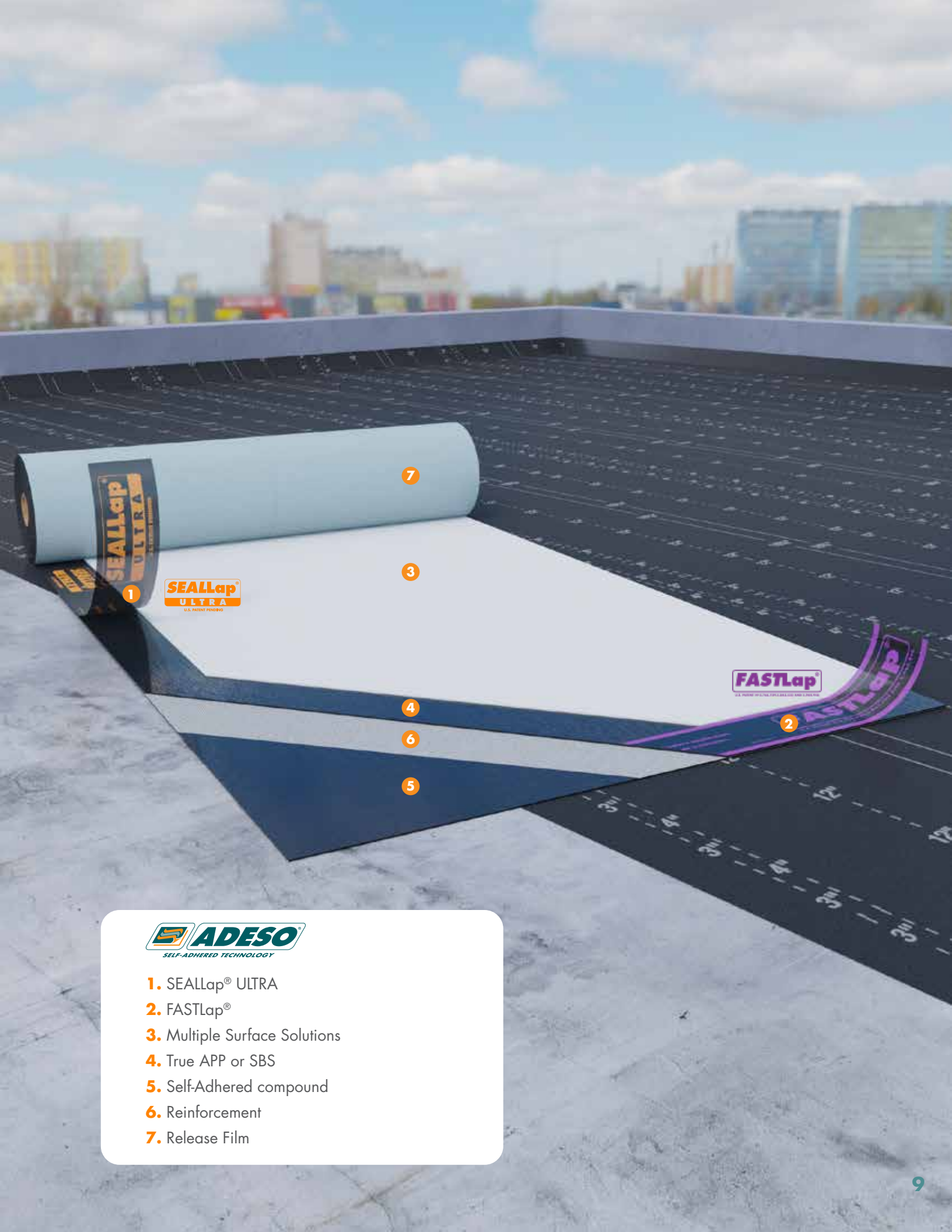

ADESO®
SELF-ADHERED TECHNOLOGY

1. SEALLap® ULTRA
2. FASTLap®
3. Multiple Surface Solutions
4. True APP or SBS
5. Self-Adhered compound
6. Reinforcement
7. Release Film

Innovations

What is CURE Technology?

CURE Technology is a patented thin film technology, resulting in a modified bitumen membrane with greatly enhanced performance benefits without compromising the ease of installation and overall value expected from Polyglass products.

Features & Benefits

- Featured on all Polyfresko cap sheets
- Vastly improved surface reflectivity and membrane emissivity
- Exceptional granule adhesion
- Ultraviolet stabilizers resulting in greater durability and longevity
- Minimal scorching with torch application
- Impact, scuff and stain resistant
- Mold and fungus resistant
- Solvent-free and environmentally friendly

Stain-Free

Minimal staining on the surface of the cap sheet; significantly resists discoloration. Maintains its color integrity over time.

Granule Adhesion

Superior granule adhesion, minimal loss of granules when exposed to foot traffic and other elements.

Reflectivity

ENERGY STAR® certified with an initial reflectivity above industry standards, maintains reflectivity performance over time.

Thin Film Technology

Minimal surface finishing while maintaining granule appearance, increased durability and improved reflectivity.

Product List

Polyfresko G
Polyfresko G FR
Polyfresko G HP FR (Type II)
Polyfresko G SBS
Polyfresko G SBS FR
Polyfresko G SBS HP FR (Type II)
Polyfresko G SA
Polyfresko G SA FR
Polyfresko G SBS SA
Polyfresko G SBS SA FR

Why POLYFRESKO with CURE TECHNOLOGY® ?

Highly Reflective, Energy Efficient Initial reflectivity above industry standards, eligible for LEED® points as part of qualified cool roof system

Durability Premium membrane construction for superior durability

Protection As part of a Polyglass multi-ply system, Class A Fire Rating with extended warranties available

Safe and secure Enhanced performance benefits without compromising the ease of installation

Stain-free Polyfresko will not discolor over time, resistant to surface blemishes and dirt pickup

Approved Applications

- Heat welded SBS
- Heat welded APP
- Self-adhered SBS
- Self-adhered APP

Code Approvals

- ASTM
- UL Classified
- FM Approved
- ICC-ES
- Florida Building Code
- Miami-Dade County Approved
- Texas Department of Insurance
- CRRC Listed
- ENERGY STAR® certified
- Can be used to comply with 2016 Title 24 Part 6 Cool Roof Requirements

*See Product Data Sheets for product specific approvals.

CRRC COOL ROOF RATING COUNCIL ®
RAPID RATINGS

	Initial	Weathered
Solar Reflectance	**0.77**	**0.68**
Thermal Emittance	**0.90**	**0.88**
Rated Product ID		0616-0011a
Licensed Manufacturer ID		0616
Classification		Production Line

*CRRC Rapid Ratings: These are interim laboratory-aged values that simulate weathered values. These values will be replaced by the measured three-year aged values upon completion of the weathering process.

Cool Roof Rating Council ratings are determined for a fixed set of conditions, and may not be appropriate for determining seasonal energy performance. The actual effects of solar reflectance and thermal emittance on building performance may vary.

Manufacturer of product stipulates that these ratings were determined in accordance with the applicable Cool Roof Rating Council procedures.

Solar Reflectance Index (SRI) Initial: 96 Weathered: 83

VELOCIFLEX

HIGH WIND RESISTANT ROOF ASSEMBLY

Polyglass' Velociflex roofing system is highlighted by two plies of modified bitumen membranes. The base sheet is "loose-laid" and mechanically attached in the side laps, which allows for fast and efficient installation. Offering multiple installation and assembly options, the Velociflex systems were independently tested providing for high speed wind protection up to 270 psf (pounds per square foot).

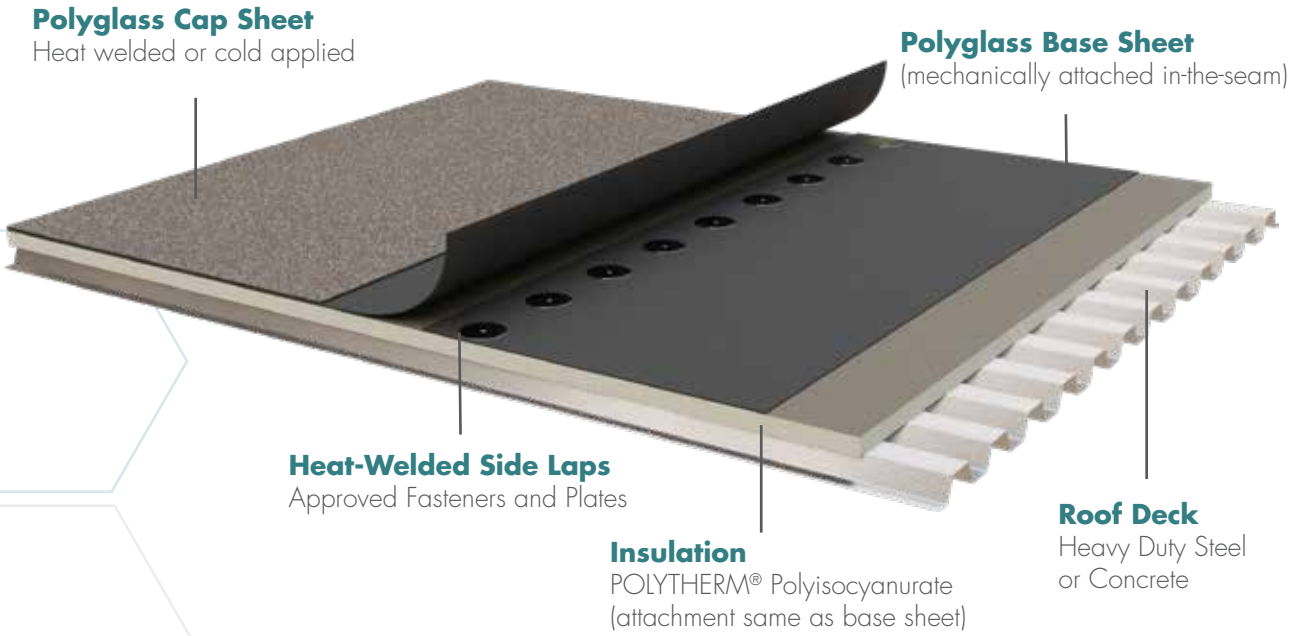

The Velociflex Advantage

✔ Meets 'Wind Load' Performance

Offering multiple base sheet and attachment pattern options, the Velociflex Roofing System can exceed specification requirements

✔ Highly Reflective 'Kool Roof' Options

Velociflex systems using a Polyfresko G cap sheet – featuring CURE Technology® – Solar Reflective Index 96, can be used to comply with 2016 Title 24 Part 6 Cool Roof Requirements and is ENERGY STAR® Certified

✔ Long-Term Performance

The core of the Velociflex system is a redundant, multi-ply, modified bitumen roof system reinforced with high strength polyester. Great for new roofing, re-roofing and recover systems.

✔ Tested & Certified

UL Classified for use in Class A roofs, as listed in the latest UL "Roofing Materials and Systems Director," and Florida Building Code approved

✔ Watertight System

Acts as a temporary roof once base sheet seams are heat welded

✔ Self Venting System

"Loose-laid" base sheet reduces chances of blistering from substrate to membrane

✔ Economical

Base sheet is fastened in the seam only, reducing material and labor costs

Velociflex System Wind Ratings

Mechanically Fastened Base Sheets with Heat Welded Cap Sheets

Polyglass Base Sheet	Attachment Pattern*	Wind Uplift Resistance (psf)
Elastoflex S6	12" o.c.	90
Elastoflex S6	6" o.c.	120
Elastoflex S6 HP	18" o.c.	120
Elastoflex S6 HP	12" o.c.	165
Elastoflex S6 HP	6" o.c.	270
Polyflex	12" o.c.	165

*Attached within the 5" wide side lap (torch-sealed or heat-welded). Contact Polyglass Technical Support for approved fasteners and plates for desired wind uplift.

Mechanically Fastened Base Sheets with Cold Applied Cap Sheets**

Polyglass Base Sheet	Attachment Pattern*	Wind Uplift Resistance (psf)
Elastoflex S6 HP	18" o.c.	120
Elastoflex S6 HP	12" o.c.	165

**Cold Applied Cap Sheets adhered with Polyglass PG 350 adhesive or PolyPlus® 35.

Innovations

Blue Cure Technology™

What is Blue Cure Technology?

Blue Cure Technology is an innovative additive developed to speed up drying and cure time in Polyglass' Turbo-Set Advanced Liquid Membrane System. Designed specifically for use with state-of-the-art proprietary equipment, this additive allows the single coat system to become rain resistant in as little as 20 minutes.

Turbo-Set

Accelerate roof coating installation time while reducing labor cost with Turbo-Set®. Developed by Polyglass U.S.A., Inc., Turbo-Set is a two-component water-based liquid membrane system that features our Blue Cure Technology™.

- Rain resistant in as little as 20 minutes, dependant on conditions
- Spray applied in a single coat
- Uses state-of-the-art proprietary equipment
- Apply over a variety of substrates
- Warranted systems available

POLYFLASH® 1C

One Part Flashing Compound

PolyFlash 1C is a one-component, state-of-the-art, silane modified polyurethane flashing compound designed for sealing and waterproofing roofing details, flashings and penetrations on a wide variety of roofing systems. When combined with PolyBrite® reinforcing polyester fabric this product can permanently solve typical and challenging flashing needs.

PolyFlash 1C has the unique ability to be applied as an immediate, but temporary emergency leak repair over wet or damp surfaces.

This high solid formulation has been designed to provide exceptional physical properties. Consult Polyglass Technical Services for additional information or refer to the Product Data Sheet for detail application instructions.

Features & Benefits

- High tensile strength
- Crack bridging capabilities
- Excellent early rain resistance
- Excellent waterproofing: <1.0 US perms
- UV resistant
- Minimal odor
- Durable
- Extensive application ambient temperature range (40° F to 122° F)
- User-friendly application
- During application, apply roofing granules to match existing roof surfacing (optional for aesthetic needs)

Seals

- Masonry
- Wood
- Curbs or Vents
- Specialty Gypsum Sheathing Products
- Roof Drains
- Pitch Pans
- Unusually Shaped Penetrations

Compatible Roof Systems

- Asphaltic Membranes
- Polymer Modified Membranes (APP, SBS)
- Conventional BUR
- Most Polyglass Roofing Membranes

Commercial Roofing Simplified

Flexible Design, Multiple Solutions

Custom Designed Solutions

Polyglass' premium quality roof systems are designed to provide better protection, greater reflectivity and labor savings for your projects. Polyglass design assistance ensures the right products are selected to best suit project requirements, saving energy, time and labor.

Polyglass versatile solutions deliver maximum roof design flexibility with a full range of product offerings, customized for project specifications.

Service & Support

Polyglass provides service and support when you need it. Our team of experts assist customers from concept to completion with each phase of the project. Commercial roofing simplified with Polyglass Systems:

- Roof design analysis
- Technical services and pre-bid budget assistance
- Project support and progress inspections

We provide consistent communication and technical support, to expedite the process, keeping your projects on time and on budget.

Warranty Protection

We stand behind our products with the most reliable warranties in the industry. Our warranty programs provide extended protection, assuring the optimum system performance is guaranteed. Polyglass offers options to extend warranty terms when highly reflective roof coatings are added to the roof assembly. We continue to safeguard our customers' assets after the installation with our warranty support.

Warranty Programs

Limited Material Warranty

- Available for 10, 12, 15, 20 and 30 year terms.
- Polyglass warrants that the Polyglass roofing membrane will be free from manufacturing defect, which affects the ability of the product to maintain the roof in a watertight condition.
- Polyglass maximum liability shall not exceed the original cost of the defective roofing membrane.

Labor & Material Warranty

- Available for 10, 12, 15, 20, 25 and 30 year terms.
- Polyglass warrants that the Polyglass roofing membrane will be free from manufacturing defect, which affects the ability of the product to maintain the roof in a watertight condition.
- Labor and Material Warranties are only available, at no cost, to Polyglass Registered, Preferred and Quantum Contractors.
- Polyglass maximum liability shall not exceed the original cost of the defective roofing membrane and the labor necessary to install it.

Roofing System Warranty (RSW)

- Available for 10, 12, 15, 20, 25 and 30 year terms.
- Applicable Warranty Fees apply, Contact a local Polyglass Sales representative or the Polyglass Warranty Department.
- Roofing System Warranties are only available to Polyglass Preferred and Quantum Contractors.
- Polyglass warrants that the Polyglass roofing membrane will be free from manufacturing defect, and that the roof over which the membrane is installed will retain its watertight integrity from the date of membrane installation, for the specified term.

Please note, Polyglass offers Limited Material and Labor & Material Warranties for both Low-Slope and Steep-Slope roofing applications. Please contact Polyglass for further details at (866) 794-9659.

Flexible System Options

Polyglass offers a wide range of roofing and waterproofing options designed to protect the building in the harshest elements. Our versatile system components are seamlessly interchangeable and compatible for most roof system applications and assemblies.

Multi-Ply System Advantages

- Increased Energy Efficiency
- Superior Protection
- Proven Performance
- Compatibility
- Multiple Surfaces & Applications Solutions
- Various Warranty Coverage
- Ease of transportation and handling of Polyglass Products on any roof size

Multiple combinations can be installed over:

- Rolled Base Sheet
- Metal Deck
- Concrete
- Lightweight Concrete
- Wood Deck
- Gypsum
- Cement

Modified Bitumen Roof System

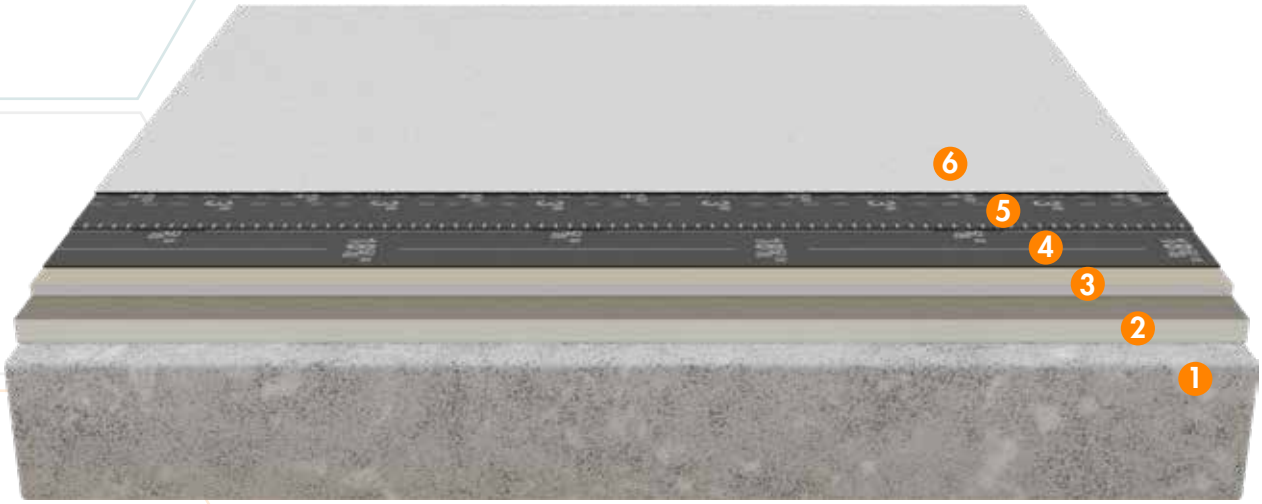

1. Roof Deck
2. Insulation
3. Coverboard
4. Base Sheet
5. Interply Sheet (optional)
6. Granulated Cap Sheet

Systems & Performance

Whether installing a new roof, repairing, restoring, retrofitting or replacing the existing roof, Polyglass systems offer multiple options and combinations to address specific roofing needs. Polyglass provides options for various project challenges and offers the most suitable solutions to maximize efficiency, durability and performance while meeting budget needs.

By choosing Polyglass roof systems you get the extra assurance of selecting proven products, backed by over 40 years of research and development with a global presence, to achieve lasting results.

Sustainable Choices

Polyglass focuses on sustainable choices through energy efficiency and environmentally responsible solutions. We are committed to enhancing the performance of buildings and utilizing renewable resources by including recycled materials in our products.

Offering a long-term solution to keep buildings energy efficient, Polyglass develops advanced energy-saving roofing systems that maximize return on investment and deliver value to the building owner.

Benefits

- Labor Savings
- Slip Resistant Surface
- UV Protection & Reflectivity
- Energy Efficient
- Sustainable Solutions
- High-wind Performance
- Excellent Weathering Capabilities
- Withstands Extreme Temperatures
- Superior Flexibility
- Excellent Tensile Strength & Dimensional Stability
- Multiple Surfacing Solutions
- Impact Resistance
- Jet Fuel and Animal Fat Resistant Options

Availability

Polyglass commercial roofing systems are available in a wide variety of APP and SBS roofing membranes designed for many applications.

- Self-Adhered
- Torch Applied
- Cold Process
- Hot Asphalt Applied
- Mechanically-Attached

Certifications

Polyglass SBS & APP membranes meet or exceed industry code approvals:

- UL Classified
- FM Approved
- ICC-ES
- Miami-Dade County Approved
- Florida Building Code
- Texas Department of Insurance
- CGSB
- Canadian Standards Association
- RCABC RoofStar
- CRRC

Full System Warranties available when installed by a Polyglass Preferred and Quantum Contractor. For more information contact info@polyglass.com.

Policy Statement

Polyglass products are intended for use in low slope and step slope roofing applications, below-grade waterproofing and lining systems and liquid applied solutions. The general requirements and guide specifications in this manual are intended to assist architects, engineers, specifiers, owners and contractors in the design and construction process. This information should be used in conjunction with the recommendations provided by such bodies as the National Roofing Contractors Association (NRCA) in their most current Roofing & Waterproofing Manual, the Asphalt Roofing Manufacturers Association (ARMA), the International Building Code (IBC) and any other appropriate national or local codes (or code enforcement agencies), as well as pertinent recommendations of any other applicable third-party, Industry associations or manufacturers.

Polyglass offers this information as a guide for the satisfactory application of Polyglass products, and accepts no responsibility or liability for the design and construction of the building, roof deck, roof loads, wind designs or uses of the products in applications not contained within the published literature and specifications. Polyglass will not be responsible for the performance of its products when they are altered or damaged in anyway as a result of design, construction procedures, inclusions or omissions, and/or acts of God.

Applicability

Though Polyglass Modified Bitumen Roofing Systems are applicable for many residential, commercial and industrial roofing applications they may not be appropriate for uses other than those contained herein. For any application or use not covered here please contact the Polyglass Technical Services Department. Exceptions to these criteria shall have no validity unless provided in writing by an authorized, technically qualified Polyglass Technical Services representative.

Polyglass materials are not to be applied, without special consideration and written approval (as described above) by our Technical Services Department, where any of the following conditions exist:

- Roofs subject to chemical or by product discharge.
- Buildings with large openings in a wall (greater than 10% of the wall surface) which could be left open in a storm.
- Roofs subject to regular traffic.
- Roofs subject to positive pressure situations such as: pressurized buildings, air-infiltrating decks, canopies, overhangs, airplane hangars, distribution centers, etc.
- Cold storage or freezer buildings or buildings with abnormally high interior temperatures.
- Swimming pools or other high humidity interior's (laundries, etc.)

Determination of satisfactory structural conditions for supporting the load of the completed roof installation as well as any other anticipated loads are the owner's, owner 's engineer and/or architect 's responsibility, not Polyglass's.

For roofs subject to code requirements or special job conditions, contact Polyglass Technical Services Department, a design professional and the local code official, prior to bidding.

Polyglass Guide Specifications are provided for the purpose of meeting the minimum requirements necessary to issue a Polyglass Warranty. Polyglass recommends that a design professional be consulted to assure proper design, installation, conformance to building codes, applicable wind designs, etc.

Safety

Refer to the General requirements of this manual, sections of important considerations from the NRCA "HARK" Manual regarding safety requirements/recommendations, as well as any other industry available documents which may address topics of concern with respect to safety, prior to the application of any roofing system. This manual is offered in good faith to support the professionally trained roofing contractor and others in the building/construction process, in making decisions with regard to use of , but not limited to, Polyglass products. Please note, although highly suggested herein for guidance, it is not an all-encompassing safety manual or training manual.

Phased Construction

Phased construction is a practice which is not recommended by NRCA (National Roofing Contractors Association). However, it is acknowledged that certain scheduling restrictions in new construction may require flexibility in construction. This may be in order to temporarily waterproof buildings and to avoid damage to, or impairment of, the completed roof membrane. For these situations Polyglass recommends the installation of a temporary roof as described in the NRCA "HARK". Polyglass membranes shall not be left "open" with regards to phased or over-night tie-ins, to ensure no water intrudes into a Polyglass system during any type of phasing.

Modifications

Any changes in, or variance, of the roofing system as published or manufactured by Polyglass, must be approved in writing by Polyglass, prior to the application of the Polyglass products. Polyglass at its discretion deserves the right to change or modify any of the information, recommendations, or specifications in its publication, without prior notice.

Warranty

For statements relating to the warranties please refer to the specific warranty (type). On non-warranted roofs, Polyglass acts only as the seller of materials, and has no control over the conditions under which the products are applied, whether by a Polyglass minimal tiered level Registered Contractor (or greater) or by another Contractor. Under these conditions, Polyglass assumes no responsibility for the performance of the roof beyond the obligation to manufacture and ship quality products that comply with published and ISO Certified Polyglass standards. Further, Polyglass assumes no responsibility for any damage resulting from use of the products in any improper manner.

Product Range

Self-Adhered membranes with ADESO® Technology

APP (Atactic Polypropylene)

A revolutionary product manufactured utilizing ADESO Dual-Compound Technology. The Self-Adhered (SA) family of products are modified using APP resins and reinforced with polyester and/or fiberglass mat, with a proprietary adhesive compound backing. The SA family of membranes provide an easier application, eliminating the need for torching or mopping.

Product Name	Modifier	Mat	ASTM	Basic Use	Top Surface	Bottom Surface
Polyflex SA Base	APP	Fiberglass	D1970	Base	Mineral	Release Film
Polyflex SA P	APP	Polyester	D6222	Cap	Granules	Release Film
Polyflex SA P FR	APP	Polyester	D6222	Cap	Granules	Release Film
Polyfresko G SA	APP	Polyester	D6222	Cap	Granules	Release Film
Polyfresko G SA FR	APP	Polyester	D6222	Cap	Granules	Release Film
Elastobase SA	SBS	Fiberglass	D1970/ D4601	Base	Film	Release Film
Elastoflex SA V	SBS	Fiberglass	D6163	Base	Film	Release Film
Elastoflex SA V FR	SBS	Fiberglass	D6163	Base	Film	Release Film
Elastoflex SA V Plus	SBS	Fiberglass	D6163	Base	Film	Release Film
Elastoflex SA V Plus FR	SBS	Fiberglass	D6163	Base	Film	Release Film
Elastoflex SA V Flashing Strips	SBS	Fiberglass	n/a	Accessory	Film	Release Film
Elastoflex SA V Polar Base	SBS	Fiberglass	D6163	Base	Film	Release Film
Elastoflex SA P	SBS	Polyester	D6164	Cap	Granules	Release Film
Elastoflex SA P FR	SBS	Polyester	D6164	Cap	Granules	Release Film
Elastoflex SA P Polar Cap	SBS	Polyester	D6164	Cap	Granules	Release Film
Polyfresko G SBS SA	SBS	Polyester	D6164	Cap	Granules	Release Film
Polyfresko G SBS SA FR	SBS	Polyester	D6164	Cap	Granules	Release Film

SBS (Styrene-Butadiene-Styrene)

A revolutionary product manufactured utilizing ADESO Dual-Compound Technology. The Self-Adhered (SA) family of products are modified using SBS resins and reinforced with polyester and/or fiberglass mat, with a proprietary adhesive compound backing. The SA family of membranes provide an easier application, eliminating the need for torching or mopping.

Application Method	Thickness (mils)	Thickness (mm)	Length (ft)	Width (in)	Coverage (ft)	Weight (lbs)	Rolls/Pallet	UL
Self-Adhered	60	1.5	65'8"	39 3/8"	200	70	20	✓
Self-Adhered	160	4.0	32'10"	39 3/8"	100	90	20	✓
Self-Adhered	160	4.0	32'10"	39 3/8"	100	90	20	✓
Self-Adhered	160	4.0	32'10"	39 3/8"	100	90	20	✓
Self-Adhered	160	4.0	32'10"	39 3/8"	100	90	20	✓
Self-Adhered	65	1.65	65'8"	39 3/8"	200	86	25	✓
Self-Adhered	80	2.0	65'8"	39 3/8"	200	94	25	✓
Self-Adhered	80	1.98	65'8"	39 3/8"	200	94	25	✓
Self-Adhered	100	2.5	49'3"	39 3/8"	150	101	20	
Self-Adhered	100	2.5	49'3"	39 3/8"	150	101	20	
Self-Adhered	80	2.0	66'8"	variable	n/a	97	20	
Self-Adhered	80	2.0	65'8"	39 3/8"	200	97	20	
Self-Adhered	140	3.5	32'10"	39 3/8"	100	84	20	✓
Self-Adhered	140	3.5	32'10"	39 3/8"	100	84	20	✓
Self-Adhered	140	3.5	32'10"	39 3/8"	100	90	20	✓
Self-Adhered	142	3.6	32'10"	39 3/8"	100	88	20	✓
Self-Adhered	142	3.6	32'10"	39 3/8"	100	88	20	✓

Product Range

APP (Atactic Polypropylene) Modified Bitumen Membranes

APP modified asphalt roofing membranes, reinforced with polyester and/or fiberglass mat offer excellent tensile strength and dimensional stability. Polyglass APP membranes can be heat-welded and are designed to be applied directly over approved substrate or as part of a multi-ply system.

Product Name	Modifier	Mat	ASTM	Basic Use	Top Surface	Bottom Surface
Polyglass Base	APP	Fiberglass	D6509	Base	Film	Film
Modibond G FR	APP	Polyester	D6222	Cap	Granules	Film
Polybond	APP	Polyester	D6222	Base/ Interply/Cap	Sand	Film
Polybond G	APP	Polyester	D6222	Cap	Granules	Film
Polybond G FR	APP	Polyester	D6222	Cap	Granules	Film
Polyflex (4mm)	APP	Polyester	D6222	Base/ Interply/Cap	Sand	Film
Polyflex (4mm) Talc Smooth	APP	Polyester	D6223	Base/ Interply/Cap	Talc	Film
Polyflex (5mm)	APP	Polyester	D6222	Base/ Interply/Cap	Sand	Film
Polyflex G	APP	Polyester	D6222	Cap	Granules	Film
Polyflex G FR	APP	Polyester	D6222	Cap	Granules	Film
Polyflex G HP (Type II)	APP	Polyester	D6222	Cap	Granules	Film
Polyflex G HP FR (Type II)	APP	Polyester	D6222	Cap	Granules	Film
Polyfresko G	APP	Polyester	D6222	Cap	Granules	Film
Polyfresko G FR	APP	Polyester	D6222	Cap	Granules	Film
Polyfresko G HP FR (Type II)	APP	Polyester	D6222	Cap	Granules	Film

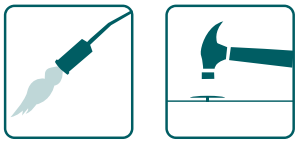

Application Method	Thickness (mils)	Thickness (mm)	Length (ft)	Width (in)	Coverage (ft)	Weight (lbs)	Rolls/Pallet	UL
Mechanically Attached	80	2.0	65'8"	39 3/8"	200	86	20	✓
Heat Weld	160	4.0	32'10"	39 3/8"	100	106	20	✓
Heat Weld	145	3.7	32'10"	39 3/8"	100	90	23	✓
Heat Weld	160	4.0	32'10"	39 3/8"	100	100	20	✓
Heat Weld	160	4.0	32'10"	39 3/8"	100	107	20	
Heat Weld/ Mechanically Attached	160	4.0	32'10"	39 3/8"	100	89	23	✓
Heat Weld	155	3.9	32'10"	39 3/8"	100	88	23	
Heat Weld	200	5.0	32'10"	39 3/8"	100	111	20	✓
Heat Weld	180	4.5	32'10"	39 3/8"	100	106	20	✓
Heat Weld	180	4.5	32'10"	39 3/8"	100	106	20	✓
Heat Weld	180	4.5	32'10"	39 3/8"	100	106	20	✓
Heat Weld	180	4.5	32'10"	39 3/8"	100	110	20	✓
Heat Weld	165	4.2	32'10"	39 3/8"	100	110	20	✓
Heat Weld	165	4.2	32'10"	39 3/8"	100	117	20	✓
Heat Weld	173	4.4	32'10"	39 3/8"	100	116	20	✓

Product Range

SBS (Styrene-Butadiene-Styrene) Modified Bitumen Membranes

SBS modified asphalt roofing membranes, reinforced with polyester and/or fiberglass mat offer superior flexibility, excellent tensile strength and dimensional stability. Polyglass' SBS modified bitumen membranes are designed to be part of a multi-ply roof system.

Product Name	Modifier	Mat	ASTM	Basic Use	Top Surface	Bottom Surface
Modibase	SBS	Fiberglass	D4601	Base/Interply	Sand	Sand
Elastovent	SBS	Fiberglass	D4897	Base (Venting)	Sand	Granule
Elastobase	SBS	Fiberglass	D6163	Base	Film/Sand	Film/Sand
Elastobase P	SBS	Polyester	D6164	Base	Film/Sand	Film/Sand
Elastoflex S6	SBS	Polyester	D6164	Base/Interply	Film/Sand	Film/Sand
Elastoflex S6 HP (Type II)	SBS	Polyester	D6164	Base/Interply	Film/Sand	Film/Sand
Elastoflex S6 G	SBS	Polyester	D6164	Cap	Granules	Film/Sand
Elastoflex S6 G FR	SBS	Polyester	D6164	Cap	Granules	Film/Sand
Elastoflex S6 G HP (Type II)	SBS	Polyester	D6164	Cap	Granules	Film/Sand
Elastoflex S6 G HP FR (Type II)	SBS	Polyester	D6164	Cap	Granules	Film/Sand
Elastoflex V	SBS	Fiberglass	D6163	Base/Interply	Film/Sand	Film
Elastoflex V 22	SBS	Fiberglass	D6163	Base/Interply	Film/Sand	Film/Sand
Elastoflex V G	SBS	Fiberglass	D6163	Cap	Granules	Film/Sand
Elastoflex V G FR	SBS	Fiberglass	D6163	Cap	Granules	Film/Sand
Elastoflex V G HP	SBS	Fiberglass	D6163	Cap	Granules	Film/Sand
Elastoflex V G HP FR	SBS	Fiberglass	D6163	Cap	Granules	Film/Sand
Elastoshield TS	SBS	Polyester	D6164	Base/Interply	Film/Sand	Film/Sand
Elastoshield TS G	SBS	Polyester	D6164	Cap	Granules	Film/Sand
Elastoshield TS G FR	SBS	Polyester	D6164	Cap	Granules	Film/Sand
Elastoshield HT	SBS	Combo	D6162	Base/Interply	Film/Sand	Film/Sand
Polyfresko G SBS	SBS	Polyester	D6164	Cap	Granules	Film
Polyfresko G SBS FR	SBS	Polyester	D6164	Cap	Granules	Film
Polyfresko G SBS HP FR (Type II)	SBS	Polyester	D6164	Cap	Granules	Film

Application Method	Thickness (mils)	Thickness (mm)	Length (ft)	Width (in)	Coverage (ft)	Weight (lbs)	Rolls/ Pallet	UL
Heat Weld, Hot Mop, Cold Process, Mechanically Attached	60	1.5	108'	36"	300	78	20	✓
Mechanically Attached	130	3.3	32'10"	39 3/8"	100	79	30	✓
Heat Weld, Hot Mop, Cold Process, Mechanically Attached	80	2.0	65'8"	39 3/8"	200	106	20	✓
Heat Weld, Hot Mop, Cold Process, Mechanically Attached	87	2.2	65'8"	39 3/8"	200	100		
Heat Weld, Hot Mop, Cold Process, Mechanically Attached	118	3.0	32'10"	39 3/8"	100	80	25	✓
Heat Weld, Hot Mop, Cold Process, Mechanically Attached	118	3.0	32'10"	39 3/8"	100	80	25	✓
Heat Weld, Hot Mop, Cold Process	157	4.0	32'10"	39 3/8"	100	107	20	✓
Heat Weld, Hot Mop, Cold Process	157	4.0	32'10"	39 3/8"	100	102	20	✓
Heat Weld, Hot Mop, Cold Process	157	4.0	32'10"	39 3/8"	100	106	20	✓
Heat Weld, Hot Mop, Cold Process	157	4.0	32'10"	39 3/8"	100	106	20	✓
Heat Weld, Hot Mop, Cold Process, Mechanically Attached	120	3.0	32'10"	39 3/8"	100	84	25	✓
Heat Weld, Hot Mop, Cold Process, Mechanically Attached	90	2.2	49' 3"	39 3/8"	150	85	25	✓
Heat Weld, Hot Mop, Cold Process	140	3.5	32'10"	39 3/8"	100	90	20	✓
Hot Mop, Cold Process	140	3.5	32'10"	39 3/8"	100	90	20	✓
Heat Weld, Hot Mop, Cold Process	140	3.5	32'10"	40 3/8"	100	93	20	✓
Heat Weld, Hot Mop, Cold Process	140	3.5	32'10"	39 3/8"	100	93	20	✓
Heat Weld, Hot Mop, Cold Process, Mechanically Attached	160	4.0	32'10"	39 3/8"	100	92	23	✓
Heat Weld, Hot Mop, Cold Process	180	4.5	32'10"	39 3/8"	100	108	20	✓
Heat Weld, Hot Mop, Cold Process	180	4.5	32'10"	39 3/8"	100	108	20	✓
Heat Weld, Hot Mop, Cold Process	95	2.4	49' 2"	39 3/8"	150	93	23	✓
Heat Weld	157	4.0	32'10"	39 3/8"	100	97	20	✓
Heat Weld	157	4.0	32'10"	39 3/8"	100	97	20	✓
Heat Weld	157	4.0	32'10"	39 3/8"	100	97	20	✓

Product Range

Polystick® Underlayments with ADESO® Technology

Polystick roof underlayments feature our revolutionary ADESO Technology, a patented method of manufacturing dual-compound self-adhesive membranes featuring enhanced lap sealing, designed to provide unmatched waterproofing across a wide range of roofing applications. This unique formulation includes an aggressive self-adhering bottom layer coupled with one of several types of top surfaces, depending on the application and waterproofing needs. No other underlayment on the market is made with this unique formulation, and none can surpass its level of protection.

Product Name	Mat	ASTM	Basic Use	Top Surface	Bottom Surface
Polystick IR-Xe (1 square)	Fiberglass	D1970	Underlayment	Mineral/Sand	Release Film
Polystick IR-Xe (2 square)	Fiberglass	D1970	Underlayment	Mineral/Sand	Release Film
Polystick MU-X	Fiberglass	D1970	Underlayment	Film	Release Film
Polystick MTS PLUS	Fiberglass	D1970	Underlayment	Film	Release Film
Polystick TU MAX	n/a	D1970	Underlayment	Polyester Fabric	Release Film
Polystick TU PLUS	Fiberglass	D1970	Underlayment	Polyester Fabric	Release Film
Polystick TU P	Polyester	D1970	Underlayment	Mineral	Release Film
Polystick P	n/a	D1970	Underlayment	Film	Release Film

Non-Modified Base, Felt and Anchor Sheets

Product Name	Modifier	Mat	ASTM	Basic Use	Top Surface	Bottom Surface
PolyAnchor	n/a	n/a	D226	Base	Film	Film
Polyglass G2 Base	n/a	Fiberglass	D4601	Base/Interply	Sand	Sand
Polyglass Ply IV	n/a	Fiberglass	D2178	Interply	Sand	Sand
Polyglass Ply VI	n/a	Fiberglass	D2178	Interply	Sand	Sand

Application Method	Thickness (mils)	Thickness (mm)	Length (ft)	Width (in)	Coverage (ft)	Weight (lbs)	Rolls/ Pallet	UL
Self-Adhered	60	1.5	33' 4"	36"	100	31 (mineral), 33 (sand)	48	✓
Self-Adhered	60	1.5	65' 8"	36"	196	56 (mineral), 61 (sand)	30	✓
Self-Adhered	60	1.5	65' 8"	36"	195	72	20	✓
Self-Adhered	60	1.5	65' 8"	39 3/8"	200	70	30	✓
Self-Adhered	60	1.5	65' 8"	39 3/8"	200	70	25	
Self-Adhered	80	2.0	65' 8"	39 3/8"	200	70	25	✓
Self-Adhered	130	3.3	32' 10"	39 3/8"	100	86	20	
Self-Adhered	42	1.07	66' 8"	36.2"	200	56	20	

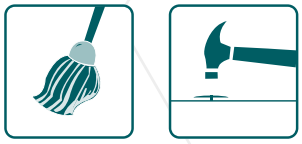

Application Method	Thickness	Length (ft)	Width (in)	Coverage (ft)	Weight (lbs)	Rolls/ Pallet	UL
Mechanically Attached	n/a	250'	48"	1000	34	20	
Hot Mop, Mechanically Attached	n/a	108'	36"	300	81	20	✓
Hot Mop, Mechanically Attached	n/a	180'	36"	500	45	20	✓
Hot Mop, Mechanically Attached	n/a	180'	36"	500	47	20	✓

Quick ASTM Product Reference

ASTM

D1970	D2178	D4601	D6162	D6163	D4897
Polystick IR-Xe Polystick MU-X Polystick MTS PLUS Polystick TU MAX Polystick TU PLUS Polystick TU P Polyflex SA Base Elastobase SA	Polyglass Ply IV Polyglass Ply VI	Elastobase SA Modibase Polyglass G2 Base	Elastoshield HT	Elastobase Elastoflex V Elastoflex V 22 Elastoflex V G Elastoflex V G FR Elastoflex V G HP Elastoflex V G HP FR Elastoflex SA V Elastoflex SA V FR Elastoflex SA V Plus Elastoflex SA V Plus FR Elastoflex SA V Flashing Strips Elastoflex SA V Polar Base	Elastovent

ASTM

D6164	D6222	D6223	D6509
Elastobase P Elastoflex S6 Elastoflex S6 HP Elastoflex S6 G Elastoflex S6 G FR Elastoflex S6 G HP Elastoflex S6 G HP FR Elastoshield TS Elastoshield TS G Elastoshield TS G FR Elastoflex SA P Elastoflex SA P FR Elastoflex SA P Polar Cap Polyfresko G SBS Polyfresko G SBS FR Polyfresko G SBS SA Polyfresko G SBS SA FR Polyfresko G SBS HP FR	Modibond G FR Polybond Polybond G Polybond G FR Polyflex Polyflex G Polyflex G FR Polyflex G HP Polyflex G HP FR Polyflex SA P Polyflex SA P FR Polyfresko G Polyfresko G FR Polyfresko G HP FR Polyfresko G SA Polyfresko G SA FR	Polyflex-Talc Smooth	Polyglass Base

Color Selection Chart

BLACK

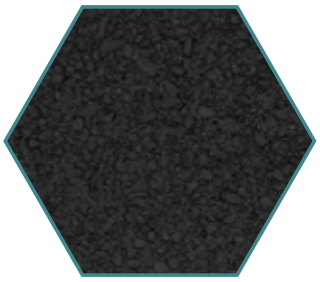

BUFF

CHESTNUT

GREY SLATE

HEATHER BLEND

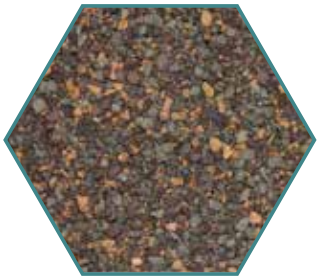

OAK

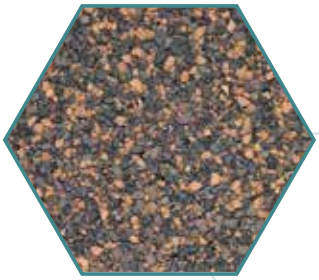

PINE GREEN

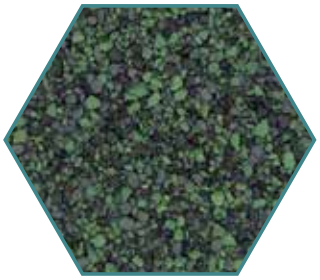

RED BLEND

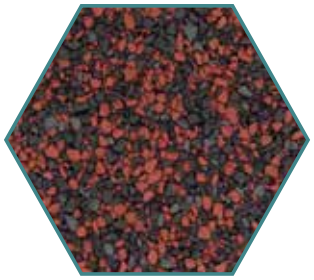

WEATHERWOOD

WHITE

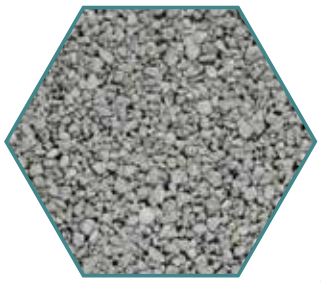

POLYFRESKO®
HIGHLY REFLECTIVE WHITE

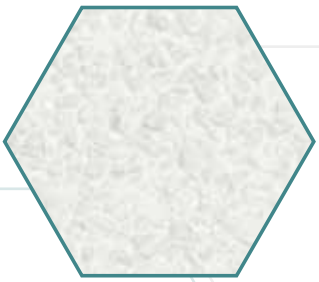

General Requirements and Design Criteria

Part 1: General Requirements 33
1.0 General 33
1.1 Quality Assurance 33
1.2 Material Handling and Storage 33
1.3 Cold Weather Installation 33
1.4 Substrate and Preparation – New and Re-Roof Applications 34
1.5 Vapor Retarders 35
1.6 Special Applications 35
1.7 Drainage 35
1.8 Cants 35
1.9 Wood Nailers 35
1.10 Expansion Joints/Area Dividers 35
1.11 Membrane Flashings 36
1.12 Walkways and Protected Membranes 36
1.13 Safety and Health 36

Part 2: Requirements for Roof Decks 36
2.0 General Roof Deck (Substrate) Information 36
2.1 Individual Deck Requirements 36

Part 3: Requirements for Thermal Insulation 37
3.0 General Thermal Insulation Information 37
3.1 Insulation Installation and Attachment 38

Part 4: Membrane Installation 38
4.0 Base and Interply Sheet Installation Options 38
4.1 Polyglass Self-Adhered (SA) Membranes with ADESO® Technology 38
4.2 Torch Applied Polyglass Membranes 39
4.3 Hot Mop Applied Polyglass SBS Membranes 40
4.4 Cold Applied Polyglass SBS Membranes 41

Part 5: Slope and Fastening Requirements 42

Part 6: Re-Cover or Re-Roofing 42

Part 7: Test Approvals and Classifications 43

Part 8: Polyglass Tiered Contractor Program 43

Part 9: Polyglass Warranty Program 43

General Requirements and Design Criteria

Part 1: General Requirements

1.0 General

A. Polyglass® U.S.A., Inc. specializes in Modified Bitumen roofing assemblies and offers a variety of products which utilize various application methods. Because Polyglass offers a wide array of products with varying application methods, product labels should be checked to ensure proper application.

B. Selection of such assemblies is dependent upon a variety of factors which include (but not limited to) roof deck type, building type, use of the building and its occupancy, applicable code requirements as well as the environment of the location of the building.

C. Polyglass does not perform design, engineering or architecture and is not responsible for system performance issues resulting from faulty building construction or improper design. Selection of products, assemblies, and individual tested systems via accredited testing organizations such as Factory Mutual (FM), Underwriter Laboratories (UL) etc. shall remain the responsibility of others.

D. Polyglass offers the information found in this manual as a variety of recommendations for individual roof constructions to assist the design professional. It is the responsibility of both the design professional and/or material applicator to ensure compliance with all applicable codes and standards required for each project.

E. Polyglass materials must be protected from any damaging or aggressive discharges such as petroleum products, greases, any oils or animal fats. Where discharges in the roof vicinity are unavoidable, a suitable and permanently maintained separation or diverting mechanism should be used. Contact Polyglass Technical Services with questions.

F. Follow manufacturer's directions for protection of any materials used in the roofing operation prior to and during installation. Do not use materials which have been damaged.

1.1 Quality Assurance

A. As an ISO 9001:2015 Certified Company, Polyglass provides quality products worldwide.

B. Polyglass offers a wide range of both material and roof system warranties as well as contractor certification levels to install the systems.

C. Dependent upon the type of warranty requested or specified, roof observations may be required. Polyglass reserves the right to conduct roof observations to ensure quality of installation.

D. Polyglass provides installers assistance with a qualified team of technical field representatives. Please contact Technical Services or your local sales representative for information regarding the technical rep assigned to your region.

E. See PART 9: Polyglass Warranty Program for information regarding individual warranties offered.

1.2 Material Handling and Storage

A. Ensure all materials are stored in a manner which prevents them being exposed to moisture.

B. Materials should be examined when received. Damaged or unlabeled materials may not be used.

C. Materials must be in a dry storage area which adequate ventilation. Care should be taken to only remove stored materials that can be installed in a reasonable amount of time. All excess materials must be kept in storage.

D. Rolls shall be stored on end with selvage edge up on pallets.

E. Polyglass does not recommend the double stacking of pallets of membranes and as such does not assume liability of damages resulting in double stacked pallets.

F. Polyglass ADESO® membranes are to be stored at room temperature whenever possible, especially above 88°F, in direct sunlight or bright sunshine in hot weather and removed only prior to installation.

G. Polyglass ADESO® membranes shall remain stored in boxes or wraps until time of application.

1.3 Cold Weather Installation

Polyglass advises against installing modified bitumen membranes at temperatures lower than 40–45°F (wherever practicable). Where work is unavoidable at such temperatures, we recommend the following precautions be taken:

A. Take extra care during cold weather installation (that is, below ambient temperatures of 40–45°F, whereas ambient temperatures are affected by wind, humidity, etc.), to ensure adequate bonding is achieved between the surfaces to be joined, by this application method. This applies to both material seam welds and adhesion of the applied product to the appropriately prepared substrate (substrate can be affected by such temperature constraints as well).

B. In addition, unrolling of cold materials, under very low ambient conditions must be avoided to prevent the likelihood of unnecessary stress cracking. The rolls must be at least 40°F at the time of application. Should the membrane roll become stiff or difficult to install, it should be replaced with a new roll from the heated storage area.

C. To prevent the aforementioned situations and to ease the progress of installation under unfavorable conditions we recommend the following procedures:

1. The general recommendations of the NRCA and ARMA should be taken into account and will be helpful.
2. Remember that wind chill will have an effect on the application temperature.
3. Ensure that membrane is only installed to properly dry, clean and primed (where necessary) surfaces as required by the specifications.
4. Store membranes at room temperature wherever possible, until immediately prior to installing the roll. Minimum ambient temperature of the storage area should be 55–60°F.
5. Once rolls of material are taken from the warmed storage area, install before the temperature of the material drops below 40–45°F.

The following application specific recommendations should be followed:

General Requirements and Design Criteria

Torch Application

The use of shielded "dragon-wagons", or moveable, flame-resistant wind shields can also be of great help in the effort to keep all surfaces and materials at a suitably warm temperature during torch application.

Hot Mop Application

Asphalt cools and thickens more quickly once removed from the heat source (tanker or kettle) and will not flow well, or give a uniform application rate, as a consequence. The following special precautions should be taken:

A. All asphalt handling equipment should be insulated in order to minimize the drop-in asphalt temperature.

B. For mop applied membranes, asphalt must be at least 400°F (with a target temperature of 425°F) or 20°F above the EVT (Equiviscous Temperature), whichever is higher, at the point of application.

C. If minimum asphalt temperature (400°F) cannot be maintained at the point of application, work should be discontinued.

D. Never overheat asphalt to compensate for cold weather conditions.

E. Mopping should not progress more than 4 feet in front of the roll at any time.

Cold Process Application

Cold process adhesives may become increasingly viscous and difficult to apply below 50°F. In such cases, extra care should be taken to ensure that the adhesives are applied at the proper rate and that humidity conditions are not conducive to condensation at the adhesive-membrane interface. Follow the adhesive manufacturer's recommendations closely. Do not proceed with application if the temperature is below 50°F, or if inclement weather threatens.

1.4 Substrate and Preparation – New and Re-Roof Applications

Substrate and Preparation

A. All surfaces to receive roofing must be properly clean and primed when necessary.

B. It should be noted that proper preparation of the substrate relies on the installing contractor and/or building owner.

C. When possible, construction of other trades prior to a finished roof application should be avoided. Protection of the finished roof is required when traffic from others is expected. Plywood, tarps, insulation, or other forms of protective sheathing should be applied prior to construction work.

D. Substrates and decking must be evaluated to identify below deck conduit, fixtures, equipment, etc. that affect the installation of the roofing assembly.

E. All rooftop units, supports, and penetrations that are to be removed should be removed prior to roof construction.

F. Attention to termination heights, penetration heights, as well as membrane flashing heights should be given prior to roof construction to ensure proper clearance to receive new roofing.

New and Re-Roof Applications

A. All surfacing or overburden materials, membranes, insulations, fasteners, membrane flashings, sheet metal flashings, and penetration flashings are to be completely removed.

B. Existing roof decks may be contaminated with asphalt, adhesives, etc. from the prior roof system. Care should be taken when adhering rigid insulation boards/cover boards to the contaminated surface. Adhesion testing must be conducted to ensure a proper and efficient bond of the new materials.

C. Irregular, or non-monolithic wall surfaces may need to be addressed to ensure a proper vertical surface to receive new membrane flashings.

D. During the construction of the roofing assembly, temporary water cut-offs and tie-ins at the conclusion of each work day must be provided. The temporary materials must be removed and properly prepared at the beginning of roof construction the following workday.

Re-cover Applications

Re-cover applications include the application of a new roof directly over an existing roofing assembly. Many considerations should be given to the suitability of this application as not every existing roof system is a candidate for re-cover. It should be noted that it is the responsibility of the architect, engineer, or owner to determine the suitability of a re-cover.

A. A complete review and assessment of both the existing roof system as well as the support system should be conducted. A design professional or licensed engineer is highly recommended to evaluate the impact of the added weight of the new roof in addition to the existing system. As stated above, Polyglass does not practice engineering.

B. The existing roof must be in sound condition and free of excessive defects.

C. The substrate (existing system) must be free of excessive moisture.

D. Existing roofing systems which contain 20–25% moisture content are not a suitable candidate for re-cover and should be torn off.

E. Moisture surveys are highly recommended to identify specific roof locations where moisture exists.

F. Test cuts may be used to evaluate the current condition of an existing roof on small projects.

G. Any wet and/or deteriorated materials must be removed and replaced with like materials prior to installation of the new roof.

H. All membrane flashings of the existing system must be removed and replaced.

I. For existing membranes left in place, the membrane must be cut in sections not to exceed 20' × 20'.

J. One-way moisture relief vents must be installed at one per 1,000 square feet or 10 squares.

K. Temporary water cut-offs and tie-ins at the conclusion of each workday must be provided. The temporary materials must be removed and properly prepared at the beginning of roof construction the following workday.

L. Coal Tar Pitch roof systems are typically an extensive re-cover and require particular attention. Please contact Polyglass Technical Services when considering a re-cover application.

M. Sprayed Polyurethane Foam roof systems are NOT a candidate for recovery.

1.5 Vapor Retarders

A. Adequate moisture vapor control is recommended (when appropriate) as a lack thereof may result in the accumulation of moisture in the roofing assembly.

B. An analysis of dew point and vapor flow should be assessed during an initial project design for the building as well as for reroofing and re-cover applications as they can alter existing vapor flow.

C. In general, vapor retarders may be required when high interior relative humidity is present. The condition is typically seen with food processing facilities, swimming pools, paper mills, laundry facilities, etc.

D. Vapor retarders are sometimes referred to as temporary or secondary roofs.

E. The necessity for use of a vapor retarder is the responsibility of the design professional and should be reviewed and approved by the building owner. The type, location and method of application is also to be determined by the design professional.

F. The National Roofing Contractors Association (NRCA) as well as the American Society of Heating, Refrigerating and Air Conditioning Engineers (ASHRAE) may be referenced for recommendations on the necessity of a vapor retarder.

1.6 Special Applications

A. Polyglass roofing assemblies are sometimes selected for installation over buildings that include unique environments and are deemed special purpose. These would include cold storage facilities, pools, as well as partially enclosed and open buildings such as hangars.

B. These should be carefully reviews as they pose design and building conditions such as elevated moisture or humidity, unusually elevated or lowered temperatures, and elevated pressure conditions.

C. Special applications also include overburden or plaza deck assemblies. These typically include the addition of additional materials for protection if the newly installed roof.

D. Technical Services should be contacted prior to these installations.

1.7 Drainage

A. Adequate drainage is required for a well-functioning low-slope roof system. The minimum recommended slope is ¼" per foot.

B. Absence of proper drainage often results in "Ponding". It is defined by the NRCA as water that has not dissipated from the roof within 48 hours.

C. Ponding water negatively affects the membrane and can result in premature deterioration, and is not covered by Polyglass warranties.

D. Ideally, the structural roof deck is designed to provide adequate slope and drainage. When the roof deck has not be constructed to provide proper slope and drainage, the use of tapered insulation is required.

E. Primary and secondary drains shall be of sufficient number and diameter and located so as to provide adequate drainage of the entire roof surface.

F. The adequacy of drainage provisions, placement, sizing and/or number of drains required is the responsibility of the design professional. Drainage conditions should meet the requirements of codes as well as standard industry recommendations.

1.8 Cants

A. Cant Strips are required at all horizontal/vertical intersections. They may be mechanically fastened or adhered to the substrate depending upon the deck type.

B. Material type of Cant strip is dependent upon the application method of the roofing assembly. Hot asphalt applied systems may utilize Perlite (conforming to ASTM C728) or wood fiber (conforming to ASTM C208). Heat welded flashing assemblies require the use of Perlite only. Self-Adhered flashing applications are recommended to include wood cant strip (primed).

C. Roofing assemblies that do not include a Cant must incorporate the use of reinforced PolyFlash® 1C at the horizontal and vertical transition. Please contact Polyglass Technical Services for details on this application.

1.9 Wood Nailers

A. It should be noted that both wood nailers and blocking materials are deemed as a component of the structure – not the roofing assembly. However, wood nailers are critical to the success of a well-performing roof.

B. Care for selection of proper lumber used for nailers is important to ensure the selection of the appropriate type and level of corrosion resistance for fasteners.

C. All nailers should be installed as per Factory Mutual LPDS 1-49 "Perimeter Flashing".

D. ANSI/SPRI ES-1 should also be referenced for edge metal and parapet wall top conditions to ensure the installation of the nailer materials/attachment to resist calculated wind loads.

1.10 Expansion Joints/Area Dividers

Expansion joints are part of the building, considerations such as design and location must be taken at the time of original building design by design professionals and reviewed by the owner. The purpose of the expansion joint is to minimize stress on the building from movement.

A. Per typical flashing details, expansion joints must me extended a min. of 8" above the roof surface on curbs. Sheet metal caps or flexible expansion joint covers are used at the top surface of the expansion joint.

B. Expansion joints must be located so as the typical drainage flow is not blocked.

C. Expansion joints are continuous along the break in the structure. They shall not be terminated short of the end of the roof deck.

Area Dividers

A. Area dividers are can be similar to but are not considered expansion joints.

B. Typical uses for dividers are to section off roof sections which were not included in original building design/construction. They can relieve stresses in an existing roofing system, and can server as a separator between two dissimilar roofing materials.

C. Area dividers are typically capped with a coping cap style sheet metal detail.

1.11 Membrane Flashings

A. Membrane flashings and their locations are particularly volatile and are most susceptible to moisture penetration. Proper installation at these locations is critical to the integrity of the roofing assembly.

B. Flashings, or, "Base Flashing", are locations on the roof whereby the field of the roof (horizontal surface) intersects with a wall, curb, penetrations (vertical surfaces), etc.

C. Membrane flashings entail the installation of two (2) plies of membrane at flashing locations. The products associated with the flashings may utilize same plies used for the overall roofing assembly.

D. Flashing locations that include irregularly shaped penetrations, low flashing clearance heights, or items too close to be properly flashed with membrane may be treated with PolyFlash 1C. Contact Technical Services for more information.

E. Minimum flashing height is 8" and the maximum flashing height is 24".

F. Base flashings shall me mechanically fastened at the top edge and terminated with a proper termination bar and counterflashing.

1.12 Walkways and Protected Membranes

Walkways help protect the membrane from damage due to routine rooftop service traffic. Walkways may consist of an additional layer of similar Polyglass membrane of a contrasting color granulated surface, or another approved walkway system. The following are typical roof locations that utilize walkways:

A. All roof access points (ladders, hatches, doorways, etc.).

B. Areas subjected to traffic in excess of one monthly visit.

C. Areas with high pedestrian traffic or subject to frequent maintenance operations.

In addition to typical locations requiring walkways, the walkway material may also be applied beneath rooftop equipment such as blocking to support gas/plumbing lines, and small non curb mounted HVAC (or other) equipment placed on wood sleepers.

1.13 Safety and Health

Strict Safety and Health precautions are necessary at all times. PLEASE READ, UNDERSTAND AND FOLLOW ALL INSTRUCTIONS ON LABELS AND PACKAGING AS WELL AS ANY APPLICABLE INDUSTRY STANDARDS AND REGULATIONS. See also all relevant sections above.

All volatile, or potentially volatile, materials such as primers, gas, cleaners, etc., shall be kept away from all ignition sources (e.g. flames, torches, fire, sparks, etc.). Consult product container labels and Safety Data Sheets for specific safety instructions. The application of those products installed with hot asphalt or torch may result in burns and other physical injury. Surfaces which contact the melted bitumen or torch may ignite. The installer should take utmost care when using hot materials such as asphalt or when torching any product. This is especially important when there may be a danger of contact with materials which may smolder, such as cellulose and wood materials, wood fiber, etc. or flammable or highly flammable solvents or chemicals.

Part 2: Requirements for Roof Decks

2.0 General Roof Deck (Substrate) Information

A. Polyglass is not responsible for design, selection, or performance of the deck. Roof decks are to be designed and constructed as per the deck manufacturers specifications and shall be suitable to receive a Polyglass roofing assembly.

B. Prior to roof construction, the acceptance of the suitability of the substrate shall remain the responsibility of the applicator and/or the Authority Having Jurisdiction.

C. Field verification of the suitability of the substrate shall include fastener withdrawal resistance, moisture content, as well as the overall condition of the substrate. Testing standards such as ANSI/SPRI FX-1 (withdrawal resistance), ANSI/SPRI 1A-1 (adhesion testing), as well as ASTM D4263 (surface moisture testing over concrete) shall be applied when assessing the condition of the substrate.

D. Re-cover application may require the use of moisture scans to verify the moisture content of the assembly that currently in place.

2.1 Individual Deck Requirements

A. Steel Decks:

1. Minimum 22 gauge cold-formed steel decking with G-90 galvanized or minimum finish coat of primer paint on both sides. Galvanized steel decking where appropriate to project design criteria is recommended.
2. Deck panels are to be anchored to the supporting members by welding or mechanically fastening. Requirements as established by Factory Mutual for gauge and span should be in compliance with Factory Mutual LPDS 1-28 and 1-29.
3. Decks shall be clean a free of moisture and debris as well as free of corrosion.
4. Damaged or deflected panels as well as deteriorated portions must be removed and replaced.

B. Structural Concrete:

1. Decks shall me a minimum compressive strength of 2,500 psi with a minimum thickness of 4".
2. The surface is to be smooth, and free of ridges, sharp edges, and irregular surfaces.
3. The underside of the concrete deck must remain unobstructed to allow for the escape of moisture.

This would include the applications of items such as paint, spray fireproofing etc.

4. Concrete decks typically require a minimum 28 cure time. Evaluation of determination of moisture content should be in accordance to ASTM D4263 (Plastic Sheet Method).
5. Field uplift resistance for adhesive applications is recommended as per ANSI/SPRI 1A-1.
6. Primers applied to the deck, when applied, must be dry prior to application of adhesives.
7. Cracks greater than ⅛" shall be filled or treated as per the direction of the deck manufacturer.

C. Cellular Lightweight Insulating Concrete:

1. Must have a minimum 200 psi compressive strength as well provide a minimum withdrawal resistance of 40 lbs. as an average pull value.
2. Deck installation shall comply with the deck manufacturer.
3. Installation shall not proceed during inclement weather including both precipitation as well as freezing temperatures. Any and all frozen deck sections shall be completely removed and replaced.
4. All measures should be taken to ensure that there is no entrapment of moisture within the deck prior to roofing applications.

D. Wood Plank:

1. Thickness to be a nominal 1" and width of 4"–6".
2. Wood plank boards shall have a bearing on rafters at each end and must be securely fastened.
3. Boards shall be kiln-dried and preferably a tongue-and-groove style to eliminate the shrinkage or warping of planks.
4. Knotholes/cracks exceeding ¼" must be covered with secured sheet metal.

E. Plywood:

1. Thickness to be a minimum of 15/32" with a minimum 4-ply conforming with C-D Exposure 1 grade.
2. The maximum joist spacing shall be 24" o.c. or less using minimum ⅛" to ¼" spacing between panels.

F. Oriented Strand Board (OSB):

1. OSB shall be PS 2-10, Exposure 1, Structural 1 not less than 7/16" in thickness.
2. The sheathing is installed with all sides bearing on and secured to joists and cross blocking in accordance the APA (Engineered Wood Association).

G. Cementitious Wood Fiber:

1. That application of cementitious wood fiber decking shall be in accordance to the individual deck manufacturer.
2. Panels shall be a minimum of 2".
3. Panels must be protected from inclement weather when stored as well as during the application of the panels.
4. Joints between panels in excess of ¼" as well as offsets in adjacent panels exceeding ⅛" mush be grouted as per the panel manufacturer's instruction.

H. Gypsum:

1. Gypsum decks must have a minimum deck thickness of 2".
2. Panels shall be a minimum of 2".
3. Panels must be protected from inclement weather when stored as well as during the application of the panels.
4. Joints between panels in excess of ¼" as well as offsets in adjacent panels exceeding ⅛" mush be grouted as per the panel manufacturer's instruction.

I. Poured reinforced concrete:

1. Shall be smooth, dry, clean and free of ice/frost, projections and depressions.
2. The concrete shall be fully cured and the surface shall be broom cleaned and free of release/curing agents prior to commencement of work.
3. The prepared concrete surfaces shall be primed with Polyglass PG 100 Fast-Drying Asphalt Primer ASTM Type D41 at a rate of approx. 1 gallon/100 square feet.
4. All primed areas shall be fully dried before proceeding with the application of the roof system.

J. Other deck types:

Contact Polyglass for recommendations in any situation which involves other deck types, new or unusual deck construction.

Part 3: Requirements for Thermal Insulation

3.0 General Thermal Insulation Information

The selection of insulation type and thickness is the responsibility of the architect, designer or owner. Insulation must provide continuous support for base sheet and membrane.

A. Polyglass modified bitumen products may be installed directly over Polyglass Polytherm® or other approved polyisocyanurate insulation boards and certain other insulation materials. Most insulation manufacturers, however, require that a base sheet or Coverboard be mechanically attached to the deck or adhered to the insulation, when direct bonding isn't acceptable.

B. Specific types and minimum thicknesses of Polytherm Insulation are available for use as a substrate for Polyglass membranes.

C. Polytherm Insulation, or other suitable polyisocyanurate insulation boards, shall be provided with a suitable overlay board prior to mopping and with a suitable base sheet prior to torch application of membrane.

D. If Polyglass Polytherm Insulation is not used, consult Polyglass Technical Services for current information regarding the acceptability of other insulation types or manufacturers.

E. Acceptable insulations: perlite, polyisocyanurate (ISO), ISO/perlite composite, expanded polystyrene (EPS)/perlite composite, phenolic, wood fiber, wood Fiber/ISO composite, glass fiber and cellular glass ("Foam glass"). Contact Polyglass for insulations not listed here.

F. In general, all Polytherm Insulation must be installed in accordance with Polyglass requirements for installation. In the case of third-party manufacturers, the insulation manufacturer's instructions shall be strictly adhered to.

G. For slope requirements for any specific system see Table 1 and PART 5: Slope and Fastening Requirements.

General Requirements and Design Criteria

3.1 Insulation Installation and Attachment

A. Incorrectly installed insulation can lead to roof system loss (blow-offs) and is the responsibility of the insulation installer, not the roof membrane manufacturer.

B. Polyglass does not warrant against improperly attached insulation or insulation failure caused by incorrect application.

C. All joints between layers should be staggered when multiple layers of insulation are installed.

D. Insulation shall be kept dry at all times. Install only as much insulation as can be covered with completed roofing membrane before the end of the day's work (or prior to onset of inclement weather).

E. Edges shall butt tightly, and all cuts shall fit neatly against adjoining surfaces to provide a smooth overall surface. Gaps of greater than ¼" width shall be filled with insulation.

F. Install tapered insulation around roof drains and penetrations to provide adequate slope for proper drainage.

G. Mechanically attached insulation shall be fastened in accordance with FM Approvals requirements for the applicable geographic Zone with the required number (and type) of fasteners and plates. Exception: where Polyglass requirements are more stringent than FM Approvals or third-party manufacturers, Polyglass requirements shall be followed.

H. When asphalt or cold adhesive attachment is selected by the project designer, the proposed insulation shall be compatible with the roof substrate, the proposed bitumen and the requirements of the specific Polyglass membrane. NOTE: Expanded polystyrene (EPS) materials shall not be installed with hot bitumen products.

- Maximum 4' × 4' insulation boards can be attached with hot asphalt.
- Asphalt for insulation attachment shall meet ASTM D312 Type III or IV criteria, as dictated by the roof slope or other design conditions.

Part 4: Membrane Installation

Commence installation of the roofing system at the lowest point of the roof (or roof area), working up the slope toward the highest point. Lap sheets shingle fashion so as to constantly shed water. For further information contact Polyglass Technical Services. Follow the recommendations for the specific type of material and layer as outlined below, or as specified. Also see PART 1: General Requirements – 1.11 Membrane Flashings.

4.0 Base and Interply Sheet Installation Options

Polyglass offers a range of choices of high quality and industry standardized base and ply sheets for various applications. Please refer to Polyglass Product Selection Guide for applicable base sheet and interply sheet membrane options.
Type II standards, are acceptable for Polyglass roofing systems and should be appropriately installed in a manner approved for the specific product, e.g. fully adhered as self-adhered or with asphalt/or cold adhesive, torch applied or mechanically attached (per industry standard fastening pattern), as applicable, and in accordance with specifications.

Side and End Laps

Base or Interply side laps are typically to be 3" minimum (usually delineated by a "lay line") for hot mopped, torch or mechanically attached application. End laps are typically 6" in all cases.

Self-Adhered Installation

The base or interply sheet shall be installed per Polyglass specifications and installation guidelines appropriate for the specific substrate type and thickness. Also see PART 1: General Requirements – 1.4 Substrate and Preparation.

Mechanically Attached

The base or interply sheet shall be fastened with FM Approvals approved fasteners, appropriate for the specific deck type and thickness. Base or ply sheet shall be fastened in accordance with one of the following agencies; FM, Miami-Dade, Florida Building Code, ICC, or TDI. Fastener lengths to be as recommended by governing code bodies and or system approvals as listed above, for required penetration of layers and deck. Also see PART 5: Slope and Fastening Requirements.

Torch Installation

See Section 4.2 Torch Applied Polyglass APP Membranes or Section 4.3 Torch Applied Polyglass SBS Membranes, and PART 1: General Requirements – 1.3 Cold Weather Installation and 1.13 Safety and Health.

Hot Mop Installation

The base and interply sheets shall be set in a solid mopping of approved asphalt, using approximately 25 lbs. per 100 square feet. Also see below and PART 1: General Requirements – 1.3 Cold Weather Installation and 1.13 Safety and Health.

Cold Applied Installation

Install base or interply sheet in a full coating of approved cold adhesive in accordance with Polyglass PolyPlus® 35 Premium Modified Bitumen Adhesive or PG 350 Modified Bitumen Adhesive application instructions or acceptable adhesive manufacturer's recommendations and installation instructions. Also see PART 1: General Requirements – 1.3 Cold Weather Installation and 1.13 Safety and Health.

4.1 Polyglass Self-Adhered (SA) Membranes with ADESO® Technology

Application of Self-Adhered Cap Sheets

Polyglass self-adhered membranes are specially designed for applications where the use of open-flame torches, solvent-based adhesive or hot-asphalt is undesirable or prohibited.

Surface Preparation

Polyglass self-adhered membranes may be applied directly to approved substrates such as; approved roof insulation, Polyglass film-surfaced base sheets and certain roof deck types. Do not apply directly to shingles, shakes, steep-sloped residential roof coverings or existing mineral surfaced roof membrane systems.

A. Apply only when the weather is dry and material interface temperatures (air, roof deck, membrane) are 40°F and rising. For temperatures between 25°F-60°F, use Polyglass Elastoflex SA V Polar Base and Elastoflex SA P Polar Cap - ADESO

Self-Adhered membranes for cold weather application. Roofing installation shall not be conducted when water in any form i.e. rain, dew, ice, frost, snow exist. Use of hot air gun or SBS modified cements, may be required at end laps and detail conditions. Low temperature applications may require additional care in the application of the membrane and details.

B. All roof deck or substrate areas shall have positive drainage, be properly supported, structurally sound to support the live and dead load requirements of the roofing system, and sufficiently rigid to support construction traffic. A minimum slope requirement of ¼" per foot of rise is recommended.

C. Apply only to dry, dust and contaminate free surfaces. For best results it is recommended that wood, concrete, masonry, metal, metallic surfaces, acceptable existing smooth surface BUR and other acceptable substrates are primed with Polyglass PG 100, WB3000, or approved ASTM D41 Asphalt Roof Primer or other approved primer prior to the application of the membrane. Any primed substrate should be fully dry prior to installation. Refer to manufacturer's recommendations.

D. Masonry or concrete supported by steel frame or other steel structure shall be provided with suitable expansion provisions and detailed to allow for sufficient movement.

E. Applicators shall ensure installation of any Polyglass self-adhered membrane does not prevent or interfere with ventilation of the existing construction.

Application

A. Remove any loose matter, surface contaminates, dust, etc. When re-roofing, remove existing materials down to an acceptable substrate and omit obsolete protrusions and repair any voids or imperfections.

B. Cut the Polyglass self-adhered membrane to a suitable length depending upon project and application conditions.

C. Lay the material flat and allow to relax prior to application. Place material and align the membrane with the lowest edge of the roof.

D. Fold the aligned membrane in half exposing the split release film or remove release from beneath the membrane.

E. Peel release film at a 45° angle in a constant motion, ensuring to keep weight on the outer edges as you progress. Position the next sheet by overlapping side laps at 3" minimum. Overlap at cut end laps minimum 6".

F. Position successive rolls using the 5" FASTLap at the end lap and 3" SEALLap ULTRA granule free side lap. Ensure a watertight seal.

G. Press the membrane into place with firm, even pressure.

H. Roll entire roof surface with an 80 lb. minimum weighted roller to ensure complete contact to underlying surface. Edges or laps to be firmly rolled by hand roller to ensure full adhesion.

I. Applications equal to or greater than 1.5" slope per foot of rise, to be back nailed at the seams with 11-gauge ring shank simplex-type nails at 8" O.C.

J. Care to be taken to prevent injury when rolling membrane, especially on slope surfaces.

K. Details and T-Joints are carried out by the use of hot-air welding technique or PolyPlus® 50 Premium Modified Wet/Dry Cement.

Precautions and limitations

Polyglass self-adhered membranes may present a slip and fall hazard. This risk is increased when wet or icy conditions exist. Adequate precautions should be taken when working. Manufacturer recommends the use of OSHA approved fall protection for project conditions.

Typical Roof Edge Detail

A. Elastoflex SA V starter strip cut to required width, adhered to deck. Ensure the surface is clean and dust free. Turn down face nailer at least 2".

B. Prime deck when required or acceptable roof insulation attached to deck. Adhere Elastoflex SA V strip-in-piece to deck and over nailer below edge metal.

C. Drip edge fastened in accordance with ANSI-SPRI ES-1 standards. Stagger roof nails at 4". Min. 2 nails at all 4" laps in metal.

D. Apply Elastoflex SA V membrane to entire roof area and onto the metal drip edge keeping ½" back from down-turn in metal. Elastoflex SA P cap sheet installed over Elastoflex SA V and onto primed metal.

Seaming Intersection Treatment – Field, Sequence (T-Joints)

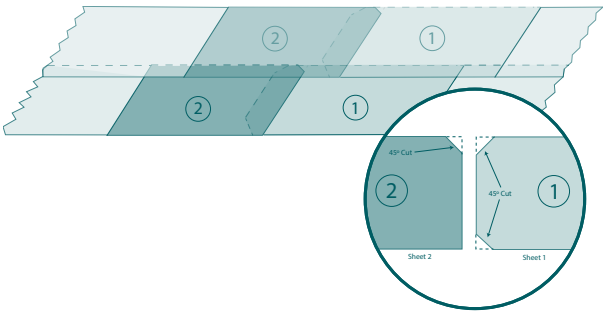

A. Sheet 1 is applied to substrate

B. 45° angle cut of membrane at corner of sheet 2 and the top corner of sheet 3

C. Sheet 2 is aligned and applied to substrate

D. Heat weld or PolyPlus 50 Premium Modified Wet/Dry Cement is applied at angle cuts.

E. Sheet 3 is applied to substrate

F. Top sheet is carefully rolled at joint

Membrane Base Flashing

A. 45° angle cut at corners and heat welded or apply PolyPlus 50 Premium Modified Wet/Dry Cement.

B. Provide Manufacturer approved detail termination, as required for specification for wall treatment.

4.2 Torch Applied Polyglass APP and SBS Membranes

Application of Torch Applied Base/Interply Sheets

Polyglass APP or SBS torch applied base or interply sheet membranes are intended to be used as a base or interply sheet in new or re-roof applications. Polyglass APP or SBS base or interply sheets may be applied directly to non-combustible substrates and

require the installation of a compatible granulated cap sheet or approved roof coating to complete the roofing system.

A. Apply over clean, dry, dust and debris-free substrates. Prime concrete decks and required substrates prior to application with PG 100 Fast-Drying Asphalt Primer. Consult Polyglass Technical Services if alternate primer is allowed.

B. When re-roofing, remove all prior roofing materials down to a clean debris-free substrate and properly close-off all abandoned roof penetrations.

C. Concrete or steel decks shall be designed with proper expansion devices.

D. Wood decks shall have all joints blocked and properly supported.

E. Ensure the fire rating of the assembly over any combustible substrate.

F. Ensure the installation of the membrane does not prevent the ventilation of existing construction.

G. Do not apply over shingles or any granulated surface.

H. While installing Polyglass APP or SBS torch applied base or interply sheet membranes:

1. Start at the low point of the roof.
2. Unroll the material and allow to relax.
3. Install with traditional torch roofing techniques ensuring proper heating of the roofing material as not to expose the reinforcement.
4. Do not heat the substrate.
5. Position successive rolls providing a minimum 6" end lap and 3" side lap. Asphalt bleed out shall be ¼" to ⅜" on all seams.
6. It is suggested but not mandatory that laps shall be rolled with a 6"-wide roller immediately after heat welding.

I. Details and flashing may be installed using Polyglass APP or SBS torch applied base or interply sheet membranes with torch applied techniques. Do not use cold adhesives or hot asphalt. Check project details for proper installation requirements.

Application of Torch Applied Cap

Polyglass APP or SBS torch applied cap sheet membranes are intended to be used as the primary weathering surface in new and re-roof applications. Polyglass APP or SBS torch applied cap sheet membranes are to be applied as the uppermost layer of a multi-ply roof system over a compatible Polyglass base and/or interply sheet. Polyglass APP or SBS torch applied cap sheet membranes may be applied directly to certain noncombustible substrates.

A. Apply over clean, dry, dust and debris-free substrates. Prime concrete decks and required substrates prior to application with PG 100 Fast-Drying Asphalt Primer. Consult Polyglass Technical Services if alternate primer is allowed.

B. When re-roofing, remove all prior roofing materials down to a clean, dust free substrate. Remove unused or abandoned through-roof penetrations.

C. All substrates shall be designed with proper expansion devices.

D. Wood decks shall have all joints cross blocked and/or properly supported.

E. Installation of the membrane should not adversely affect the ventilation of existing construction.

F. Do not apply directly to existing shingles or other unacceptable roof coverings.

G. While installing Polyglass APP or SBS torch applied cap sheet membranes:

1. Start at the lowest point of the roof.
2. Unroll the material and allow it to relax as membrane is positioned prior to installation.
3. Install with traditional torch roofing techniques ensuring proper heating of the roofing material.
4. Do not overheat to expose or compromise the reinforcement.
5. Position successive rolls using the 5" FASTLap at the end lap and 3" SEALLap ULTRA granule free side lap. Bleed out of APP asphalt should be ⅛" to ¼" at all seams to ensure a watertight seal.
6. Laps may be lightly rolled with a 4" to 6" wide roller to ensure lap is fused.

H. Details and flashings may be installed using torch applied techniques. Do not adhere using cold adhesives or hot asphalt. Refer to manufacturer's published details for proper design and installation of detail work.

I. For detailed drawings and recommended installation procedures of typical roof segments, such as drip edge and T-joint conditions, please refer to our website at, www.polyglass.us.

4.3 Hot Mop Applied Polyglass SBS Membranes

Before commencing the torching operation, remove the roll wrapping tape by cutting carefully (not ripping). The procedures below shall then be followed:

A. The first roll of acceptable Polyglass SBS Base or Cap sheet shall be set and unrolled completely. It shall then be re-rolled and installed to the initial alignment set.

B. Following rolls shall be unrolled approximately 6' (or half roll length if desired) to align sheets to the lap lines (or selvage edges).

C. The sheets shall then be set in a solid mopping of approved asphalt (see below) depending upon variables such as slope and substrate using approximately 25 lbs. per 100 square feet.

D. Where asphalt is required by specification, Polyglass recommends the use of ASTM D312 Type III or Type IV Asphalt commensurate with roof slope, installed as follows.

1. Asphalt should be applied at the proper EVT (Equiviscous Temperature), as recommended by the asphalt supplier/manufacturer, and the NRCA manual (Technical Bulletin #2). Polyglass cannot be held responsible for any damages which may occur should the applicator or specifier, require a method of torching other than those recommended by Polyglass. Furthermore, since the decision is something the applicator must determine based upon ambient and job-site conditions it is the applicator's sole responsibility and Polyglass will not be responsible for any deviations from recommended procedures.
2. Mopping temperature should be maintained at a minimum 400°F (with a target of 425°F) at the point of application.

3. If minimum asphalt temperature (400°F) cannot be maintained at the point of application, work should be discontinued.
4. Asphalt shall be applied at the recommended minimum rate (25 lb. per ply, per square) in an even, uniform method without interruptions or voids.
5. Mopping should not progress more than 5–7' in front of the roll at any time.
6. During cold temperature application, insulated equipment is recommended for maintaining minimum acceptable temperatures. Asphalt shall be applied no more than 4' ahead of the membrane roll.
7. Brooming of felts is recommended to ensure 100% bonding in the asphalt.
8. Never overheat asphalt to compensate for cold weather conditions.
9. Areas of asphalt "bleed-out" at seam edges and details (such as curb or flashing corners, etc.) of granular membrane should be treated by sprinkling additional loose granules (available from Polyglass) into the fresh, hot asphalt. Areas missed may require patching with a new piece of membrane.
10. For a short time after installation, foot traffic on the sheets should be kept to a minimum in order to avoid unnecessary damage to the membrane.

Also see PART 1: General Requirements – 1.3 Cold Weather Installation and 1.13 Safety and Health.

4.4 Cold Applied Polyglass SBS Membranes

Surface Preparation:

A. Surfaces to receive coating must be clean, dry and free from any foreign matter such as dirt, oils, grease or other debris that could inhibit the adhesion capabilities of the newly installed products. Priming is recommended when adhering to questionable conditions.

B. On existing roofs, inspect roof substrate condition. Blisters, buckles, and raised edges should be cut out and repaired for a smooth surface.

C. Check all flashings, edges, drains, valleys and vents and repair as needed.

D. Do not use on wet or damp surfaces, directly over wood or on surfaces previously covered with coal tar-based products.

E. Surfaces to receive coating must be clean, dry and free from any foreign matter such as dirt, oils, grease or other debris that could inhibit the adhesion capabilities of the newly installed products. Priming is recommended when adhering to questionable conditions.

F. On existing roofs, inspect roof substrate condition. Blisters, buckles, and raised edges should be cut out and repaired for a smooth surface.

G. Check all flashings, edges, drains, valleys and vents and repair as needed.

H. Do not use on wet or damp surfaces, directly over wood or on surfaces previously covered with coal tar-based products.

Application:

A. Stir well prior to application.

B. Application Rate: Approximately 1.5–2 gallons per square per square when applied to smooth to semi-smooth surfaces. Coverage rate may vary depending on ambient temperature, surface porosity, as well as applicator and/or application technique.

C. PolyPlus 35 may be applied by high pressure spray, notched squeegee, or brush application methods.

D. After Adhesive Application: Apply membrane within 15 minutes of adhesive application. Unroll modified and base sheet rolls and allow them to relax prior to installation. Make sure that membrane is lying flat and making full contact with the adhesive. Roll all side and end laps making sure a sufficient amount of adhesive is applied so that a bead is visible at all lap edges.

E. Two Layer Application: Install SBS base membrane in adhesive - wait three to seven hours to allow adhesive to set before installing the SBS cap membrane.

F. Slope Application: The adhesive may be used on various slopes up to 1 ½" per foot. Slopes greater than 1 ½" per foot will require back-nailing. Slopes less than or equal to 1 ½" per foot may require back-nailing. Please call Polyglass Technical Services should you have any questions on slope application.

G. Apply only when ambient temperatures are 35°F and rising. Cold weather will cause product to stiffen, making application difficult.

H. Do not apply if inclement weather is expected within 24 hours.

I. Do not heat outside of container or attempt to thin this product. Not recommended for application on substrates that exceed 140°F.

J. Close air intakes on roof until solvents dissipate. Solvent vapor can penetrate porous substrates. Make sure there is proper outside ventilation for the underside of this type of roof deck.

Limitations:

A. Do not use with organic saturated felts.

B. Do not use on TPO, EPDM, PVC, or other single ply membranes.

C. Not to be installed over or under polystyrene insulation.

Storage and Cleaning:

A. Shelf life is 18 months if stored in original unopened containers.

B. All containers should be sealed when not in use.

C. Store between 40°F and 100°F.

D. If temperatures are cold, store product in a heated area overnight.

E. DO NOT HEAT WITH AN OPEN FLAME.

F. Observe normal safeguards for storing and handling of this product prior to and during application.

G. Clean equipment and overspray with water.

H. Clean hands with waterless hand cleaner.

I. Application tools and equipment can be cleaned with odorless mineral spirits solvent. Recirculate through lines and spray equipment guns until residual coating is removed.

J. DO NOT USE WATER OR RECLAIMED SOLVENTS.

General Requirements and Design Criteria

Part 5: Slope and Fastening Requirements

TABLE 1
Back Nailing Requirements for Sloped Roofs

SBS MEMBRANES SELF-ADHERED MEMBRANES POLYSTICK UNDERLAYMENTS	¼" – ½"	> ½" – 1½" (see Footnote 1)	1½" – 3" (see Footnote 1)	> 3" – 6" (see Footnote 1)
	NO BACK NAILING REQUIRED	WOOD NAILER INSTALLED AT RIDGE, EVE AND 32' CENTERS	WOOD NAILER INSTALLED AT RIDGE, EVE AND 16' CENTERS	WOOD NAILER INSTALLED AT RIDGE, EVE AND 12' CENTERS
APP MEMBRANES ALL SMOOTH AND GRANULATED, POLYESTER OR POLYESTER/GLASS COMBINED PRODUCTS	¼" – 3"	> 3" – 6" (see Footnote 1)	> 6" (see Footnote 1)	
	NO BACK NAILING REQUIRED	WOOD NAILER INSTALLED AT RIDGE, EVE AND 16' CENTERS	WOOD NAILER INSTALLED AT RIDGE, EVE AND 16' CENTERS	

[1]NOTE: For SBS, Self-Adhered and Polystick® membranes on slopes > 6", contact Polyglass Technical Services Department.

Nailers matching the height of the insulation are to be installed at the ridge, eve and:

(1) at 32', 16', 12' or 10' centers, parallel (strap) to the slope, as delineated above. Modified sheets are cut to 10', 12' or 16' lengths and back nailed at the end lap into the nailers using Polyglass approved Fasteners and Plates at a spacing of 4" on center staggered (max).

*Applicable APP/TPO membranes torched directly over mechanically attached base sheet, or other acceptable substrate. Where APP/TPO membranes are applied over mopped or cold applied base sheets SBS requirements apply.

A. Polyglass recommends positive slope to drain criteria (see also drainage section), that the recommendations of the NRCA and ARMA be followed and that roofs be provided with a minimum slope of 1/4:12. All ponding water shall dissipate after a period of 48 hours.

B. Follow the requirements of the insulation manufacturer for fastening or attachment of the insulation system. Roof Insulation Boards shall be attached with an FM Approvals fastening pattern or attachment methods for the wind loads expected. The fastening may vary from manufacturer to manufacturer. Consult the latest FM Approvals Approval Guide or contact Polyglass Technical Services for assistance.

C. For typical fastening requirements for Base Sheets, consult the latest FM Approval Guide or contact Polyglass Technical Services for assistance.

D. Membrane Back-Nailing Requirements are provided in Table 1.

E. On non-nailable decks, nailers (adequately secured to the deck) may be required at specific spacing to allow for back nailing of membranes. In such cases the membrane is to be fastened into the nailers with suitable fasteners.

Part 6: Re-Cover or Re-Roofing

Polyglass products are suitable for many re-cover roofing applications. While it is necessary to completely remove any areas of decking, roof covering and insulation that are badly deteriorated and/or moisture laden, some existing roofs may be suitable for re-covering without complete removal, provided they are adequately prepared. All re-roofing projects must be considered unique and each should be assessed on an individual basis. Some general procedures are recommended in considering any project. NOTE: Analysis of the existing conditions (such as drainage, existing moisture, deck & structural integrity, etc.) is the responsibility of the Building Owner or the design professional. The determination of need for a vapor retarder is the sole decision of a design professional i.e. Registered Professional Engineer or Architect, or Registered Roof Consultant. Polyglass recommends that a professional moisture survey and analysis be carried out to determine the existing moisture content of the roof, just prior to commencing the re-roof or re-cover work. To qualify for certain system guarantees, which may be obtainable through Polyglass Registered Contractors, the need for an infrared (IR) scan, or other suitable survey may be mandatory for obtaining a guarantee. NOTE: Where the existing roofing system (all existing waterproofing and insulation materials, including any vapor retarders) is to be removed down to the deck, AND where it is determined (by the Owner, Design professional, Architect or Engineer) that the existing deck is suitable for applying a new roofing system, the requirements for new roofing may be applicable. Where existing roofing materials are to be left in place the following requirements are to be adhered to. The following recommendations provide some guidelines for assessment of the existing roof system to determine the appropriate Polyglass re-cover/re-roof system:

A. Evaluate existing roof conditions including interior and exterior surveys. Locate points of interior leakage, condition of underside of deck, and areas where moisture may be present in the system/insulation.

B. The adequacy needs for a vapor retarder (see section on Vapor Retarders) should be established, by a party other than Polyglass.

C. Establish whether the deck is structurally sound and able to accept the imposed weight of a new system.

D. Determine whether the method of existing roof attachment is adequate.

E. Ensure adequate provision made for clearance (height) of new or existing curbs, counter flashing, walls, etc.

F. Determine whether the roof system drains properly and what measures are necessary prior to the re-cover/re-roof operation. Existing deck deflection or ponding water may require upgrading of the drainage provisions, including possible addition of new drains, increased bar joist support, etc. Also see PART 1: General Requirements – 1.7 Drainage.

G. Ensure that there is no more than one existing roof covering.

Once the applicability and practicality of a re-cover/re-roof has been determined, by the building owner or his design professional, and when all preliminary evaluations and necessary adjustments, or allowances, have been made the following preparations must be carried out.

Preparation

The ultimate performance of any re-cover project is the direct result of adequate preparation of the existing roof assembly. The following are the minimum recommendations for a successful re-cover:

A. Power broom and vacuum all surfaces to remove loose aggregate.

B. All wet or deteriorated areas of membrane, insulation or decking, components, blisters, splits, and surface irregularities shall be removed and patched to create a stable, smooth and even surface.

C. Remove existing roof flashings from curbs and parapet walls down to roof surface.

D. Remove existing flashings at roof drains and roof penetrations.

E. Install new wood nailers as necessary to accommodate insulation/recovery board or new nailing patterns.

F. When mechanically attached, the fastening pattern for the insulation/recovery board shall be as recommended by the specific product manufacturer.

G. Re-roofing over coal tar pitch generally requires a mechanically attached recovery board or insulation and a base sheet prior to the application of a Polyglass roofing system.

Part 7: Test Approvals and Classifications

Polyglass has an ongoing Code Approvals and Product Compliance Testing program. Testing is carried out at Underwriter's Laboratories, LLC (UL LLC), FM Approvals (FM), Miami-Dade County Building Code Compliance (NOA), Florida Building Code (FBC), International Building Code (IBC), International Code Council (ICC), Texas Department of Insurance (TDI), Cool Roof Ratings Council (CRRC) and various other established testing facilities in the USA. In addition, Polyglass products are widely tested and approved in accordance with the requirements of ASTM and a variety of international approval bodies and testing laboratories in accordance with many internationally recognized standards. For specific details please contact Polyglass or consult the latest published listings of the various code/approval bodies.

Part 8: Polyglass Tiered Contractor Program

Polyglass maintains a roster of Roofing Contractors (Registered, Preferred and Quantum) who install and repair Polyglass roofing systems. Polyglass Roofing Contractors are those contractors who are eligible for Limited Material, Labor and Material, and Fully System Warranties, provided the installation complies with current Polyglass Details and Guide Specifications.

The Polyglass contractor program is a three-tiered program that rewards contractors for quality Polyglass roof system installations. Designed to recognize the contractor for their commitment to excellence, each tier provides unique benefits.

The three tiers are:

- Registered Contractor
- Preferred Contractor
- Quantum Contractor

Polyglass Roofing Applicators are not agents or representatives of Polyglass They are, however, independent applicators who have expressed an interest in Polyglass and have met the qualifications required by Polyglass. For specific applicators in your area, or to receive information on becoming a Polyglass Applicator, please contact a Polyglass Sales Representative or visit our website www.polyglass.us.

Part 9: Polyglass Warranty Program

Polyglass offers no-cost Limited Material and Labor and Material Warranties. These Warranties protect the owner from leaks as a result of defective material. The length of these Warranties can vary from 10 to 30 years, depending on the specific system and materials installed.

For a fee, Polyglass offers NDL (No Dollar Limit) Full System Warranties. These warranties protect the owner from leaks caused by defective material and workmanship (provided the system has been correctly installed by a Polyglass Preferred or Quantum Applicator. Full Systems warranties provide protection to the owner by covering all Polyglass products in the assembly, not just the roofing membrane. Full Systems warranties provide the owner with extensive protection. The systems are limited to materials supplied by Polyglass, and certain requirements, formalities of application and acceptance are required, PRIOR to the installation work.

For specific Warranty Fees and Systems, contact your Polyglass Sales Representative.

Polyglass Reserves the right not to issue the requested Warranty if the proper Guidelines of Registration have not been followed, or if the system does not meet the minimum requirements required for the desired Warranty.

Online Specifications Generators

Polyglass is listed! Find us on these Spec Generators online.

ARCAT®
arcat.com

BSD SpecLink
bsdspeclink.com

MasterSpec®
a product of The American Institute of Architects
avitru.com/specifications/masterspec/

For questions contact Polyglass Technical services Design Specialist at technical@polyglass.com

For full specifications on systems listed here, visit polyglass.us

Guide Specifications

1-Ply Systems

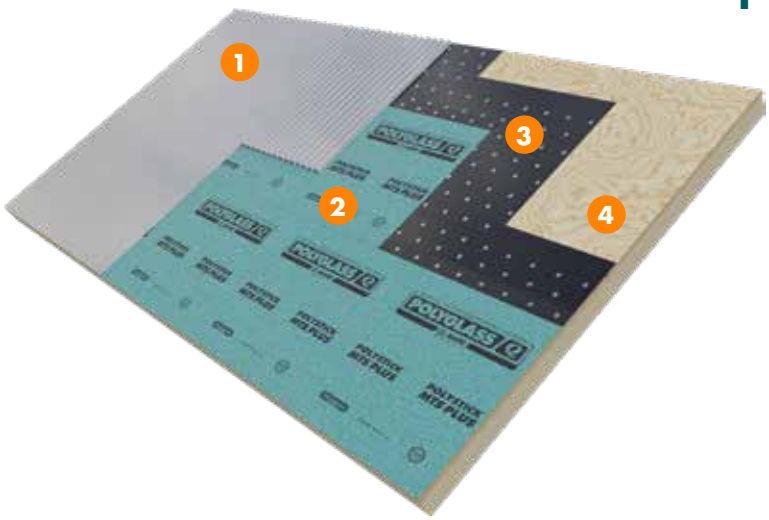

1-Ply Polystick MTS PLUS

1. **Roof Covering:** Metal Roofing (by others)
2. **Base Ply Underlayment:** Polystick MTS PLUS
3. **Base Layer:** 30 lb. Sheet (per code)
4. **Roof Deck:** Approved/Accepted Substrate (prime when necessary)

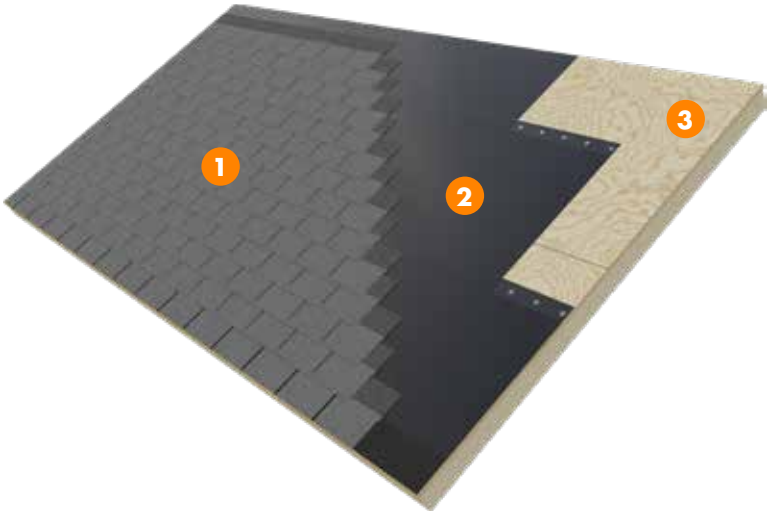

1-Ply Polystick IR-Xe

1. **Roof Covering:** Asphalt Shingles (by others)
2. **Base Ply Underlayment:** Polystick IR-Xe (sand or mineral)
3. **Roof Deck:** Approved/Accepted Substrate (prime when necessary)

Guide Specifications

1-Ply Systems

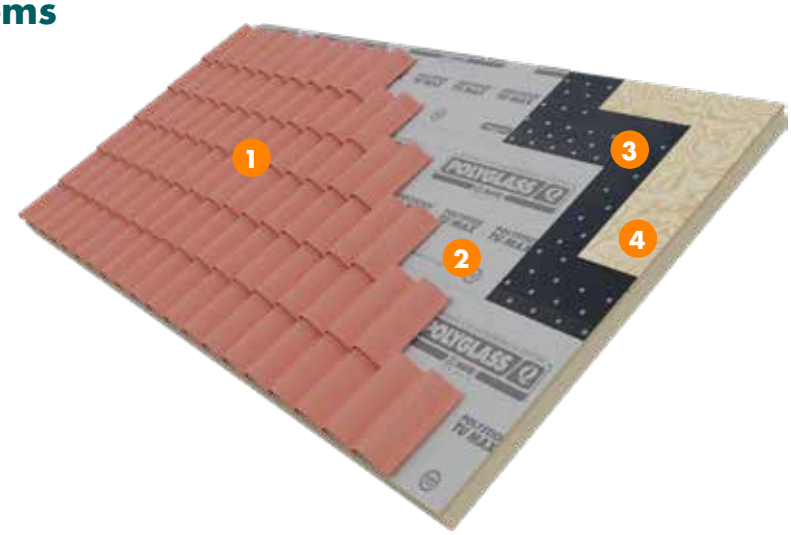

1-Ply Polystick TU MAX

1. **Roof Covering:** Roofing Tiles (by others)
2. **Base Ply Underlayment:** Polystick TU MAX
3. **Base Layer:** 30 lb. Base (per code)
4. **Roof Deck:** Approved/Accepted Substrate (prime when necessary)

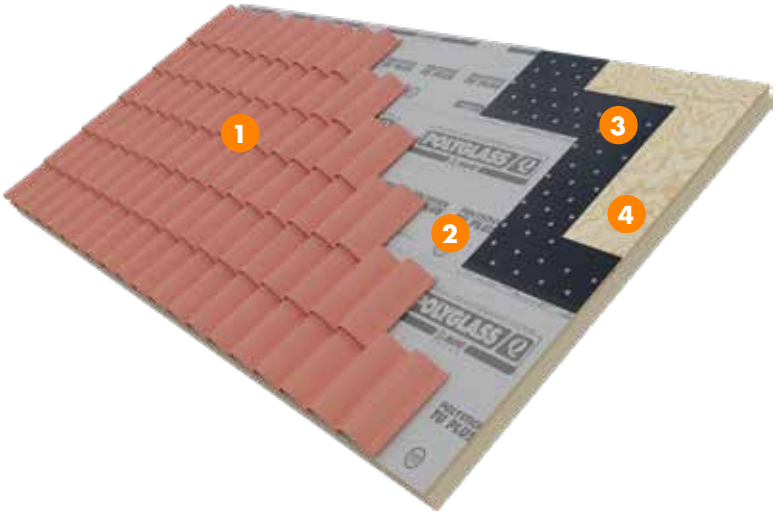

1-Ply Polystick TU PLUS

1. **Roof Covering:** Roofing Tiles (by others)
2. **Base Ply Underlayment:** Polystick TU PLUS
3. **Base Layer:** 30 lb. Base (per code)
4. **Roof Deck:** Approved/Accepted Substrate (prime when necessary)

Guide Specifications

2-Ply Systems

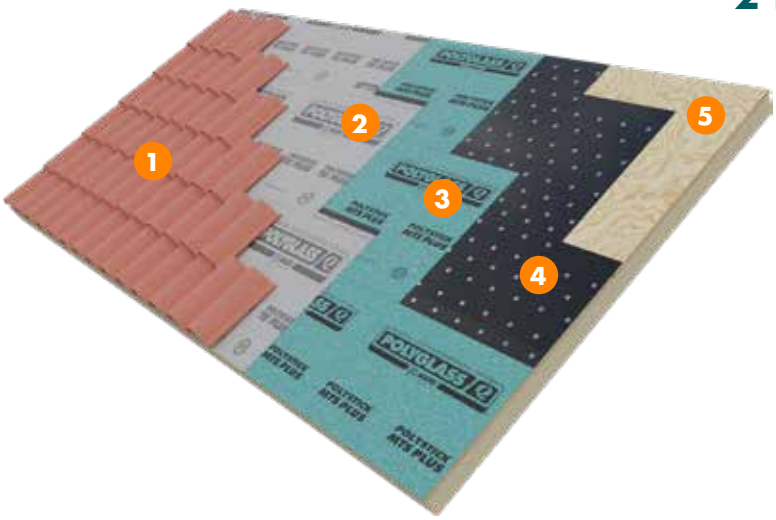

2-Ply Polystick TU PLUS/Polystick MTS PLUS

1. **Roof Covering:** Roofing Tiles (by others)
2. **Top Ply Underlayment:** Polystick TU PLUS
3. **Base Ply Underlayment:** Polystick MTS PLUS, Polystick TU MAX, Polystick P, Polystick MTS PLUS
4. **Base Layer:** 30 lb. Base (per code)
5. **Roof Deck:** Approved/Accepted Substrate (prime when necessary)

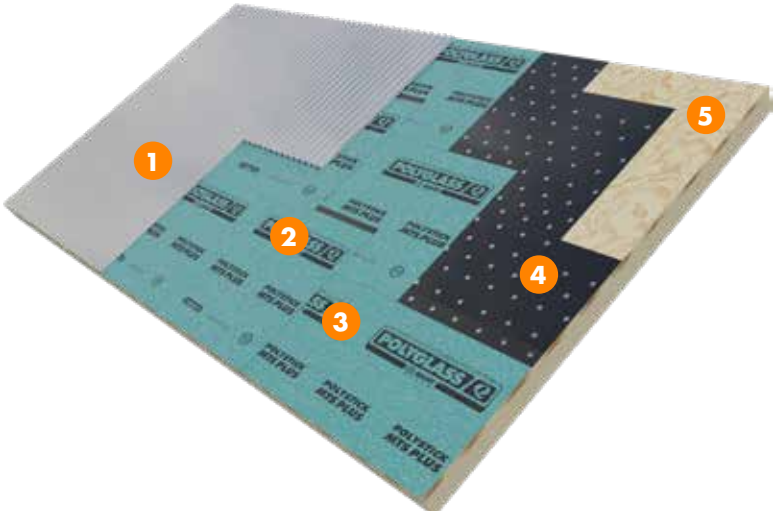

2-Ply Polystick MTS PLUS/Polystick MTS PLUS

1. **Roof Covering:** Metal Roofing (by others)
2. **Top Ply Underlayment:** Polystick MTS PLUS
3. **Base Ply Underlayment:** Polystick MTS PLUS
4. **Base Layer:** 30 lb. Base (per code)
5. **Roof Deck:** Approved/Accepted Substrate (prime when necessary)

Guide Specifications

2-Ply Systems

2-Ply Self-Adhered

1. **Cap Sheet:** Polyflex® SA P, Elastoflex SA P or Polyfresko® G SA
2. **Base Sheet:** Elastoflex SA V or SA V PLUS
3. **Roof Deck:** Plywood

2-Ply Self-Adhered

1. **Cap Sheet:** Polyflex® SA P, Elastoflex SA P or Polyfresko® G SA
2. **Base Sheet:** Elastoflex SA V or SA V PLUS
3. **Insulation:** Polyglass Polytherm® ISO
4. **Roof Deck:** Heavy Gauge Steel, Structural Concrete or Plywood

Guide Specifications

2-Ply Systems

2-Ply Stick 1-Torch 1

1. **Cap Sheet:** Polyflex® G, Elastoflex S6 G or Polyfresko® G
2. **Base Sheet:** Elastoflex SA V or SA V PLUS or Elastobase® SA
3. **Insulation:** Polyglass Polytherm® ISO
4. **Roof Deck:** Heavy Gauge Steel or Structural Concrete

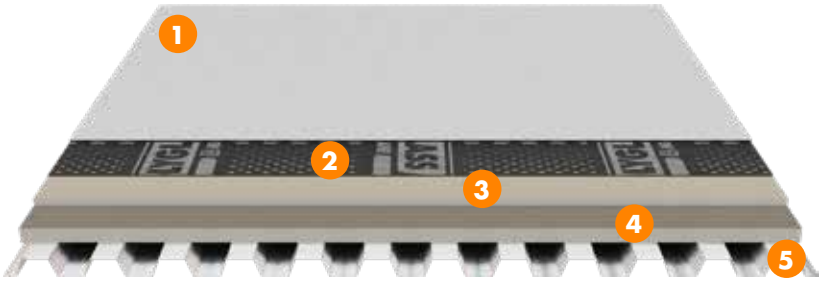

2-Ply Heat Welded APP

1. **Cap Sheet:** Polyflex® G or Polyfresko® G
2. **Base Sheet:** Polyglass Base or Polyflex®
3. **Coverboard:** (by others)
4. **Insulation:** Polyglass Polytherm® ISO
5. **Roof Deck:** Heavy Gauge Steel or Structural Concrete

Guide Specifications

2-Ply Systems

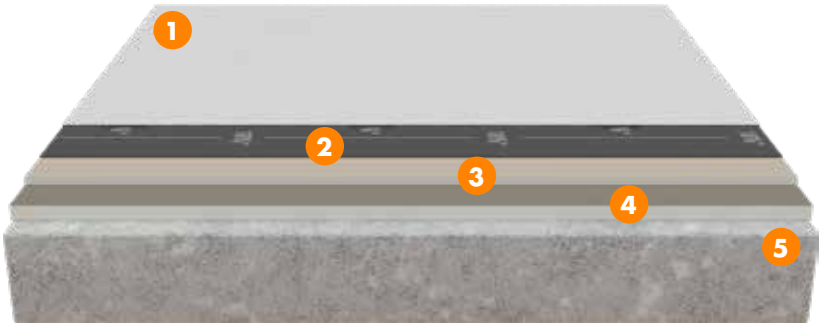

2-Ply Heat Welded SBS

1. **Cap Sheet:** Elastoflex S6 G, Elastoshield® TS G or Polyfresko® G SBS
2. **Base Sheet:** Elastoflex S6 or Elastoshield® TS
3. **Coverboard:** (by others)
4. **Insulation:** Polyglass Polytherm® ISO
5. **Roof Deck:** Heavy Gauge Steel or Structural Concrete

2-Ply Lightweight Heat Welded

1. **Cap Sheet:** Polyflex® G, Elastoflex S6 G or Polyfresko® G
2. **Interply Sheet:** Polyflex® or Elastoflex S6
3. **Base Sheet:** Elastobase® or Elastovent® (mechanically attached)
4. **Roof Deck:** Lightweight Insulation Concrete (LWIC of approved type)

Guide Specifications

2-Ply Systems

2-Ply Hot Mop

1. **Cap Sheet:** Elastoflex S6 G, Elastoflex S6 G HP or Elastoshield® TS G
2. **Base Sheet:** Elastobase® or Elastoflex V or Elastoshield® TS
3. **Insulation:** Polyglass Polytherm® ISO (optional)
4. **Roof Deck:** Structural Concrete

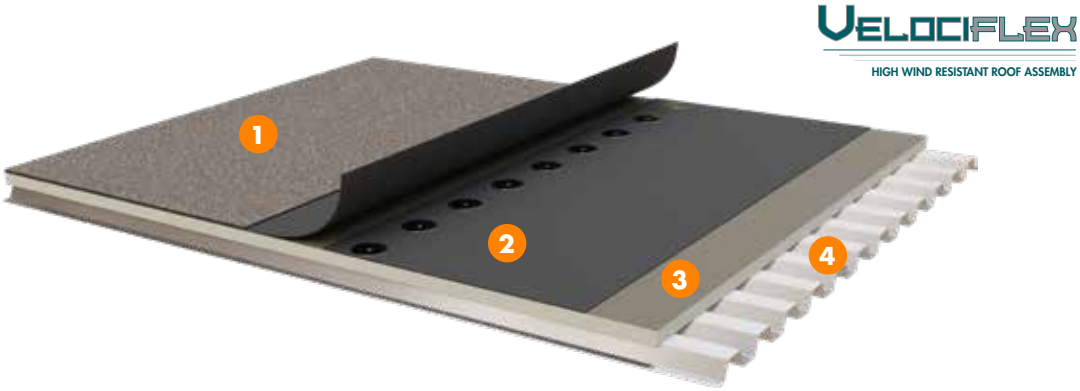

2-Ply Velociflex System

1. **Cap Sheet – Heat Welded**:** Polyfresko® G/G SBS, Elastoflex S6 G/S6 G HP, Elastoshield TS G, or Polyflex® G/G HP
2. **Base Sheet – Mechanically Fastened (seam is heat fused):** Elastoflex S6, Elastoflex S6 HP** or Polyflex®
3. **Insulation:** Polyglass Polytherm® ISO
4. **Roof Deck:** Heavy Gauge Steel or Structural Concrete

Note: Wind Uplift ratings determined by fastener pattern. Contact Polyglass Technical Support for full specifications.
**Velociflex Systems may also incorporate cold applied bonding for cap sheet membranes.

Guide Specifications

3-Ply Systems

3-Ply Self-Adhered

1. **Cap Sheet:** Polyflex® SA P, Elastoflex SA P or Polyfresko® G SA
2. **Interply Sheet:** Elastoflex SA V or SA V PLUS
3. **Base Sheet:** Elastoflex SA V or SA V PLUS
4. **Roof Deck:** Plywood

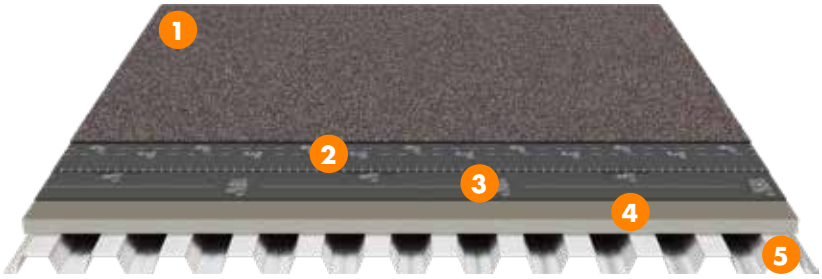

3-Ply Self-Adhered

1. **Cap Sheet:** Polyflex® SA P, Elastoflex SA P or Polyfresko® G SA
2. **Interply Sheet:** Elastoflex SA V or SA V PLUS
3. **Base Sheet:** Elastoflex SA V or SA V PLUS
4. **Insulation:** Polyglass Polytherm® ISO
5. **Roof Deck:** Heavy Gauge Steel, Structural Concrete or Plywood

Guide Specifications

3-Ply Systems

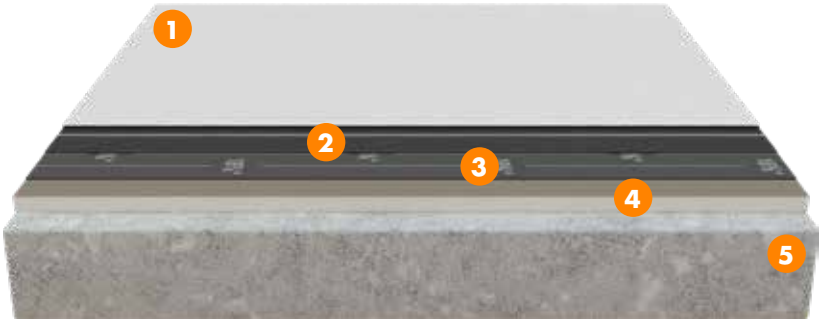

3-Ply Stick 2-Torch 1 System

1. **Cap Sheet:** Polyflex® G, Elastoflex S6 G or Polyfresko® G
2. **Interply Sheet:** Elastoflex SA V or SA V PLUS or Polyflex®
3. **Base Sheet:** Elastoflex SA V or SA V PLUS
4. **Insulation:** Polyglass Polytherm® ISO
5. **Roof Deck:** Heavy Gauge Steel or Structural Concrete

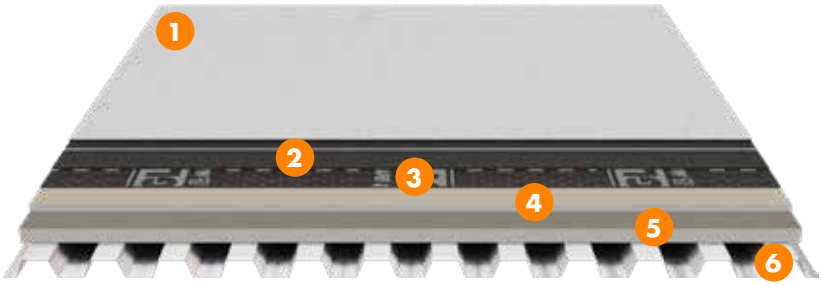

3-Ply Heat Welded APP

1. **Cap Sheet:** Polyflex® G or Polyfresko® G
2. **Interply Sheet:** Polyglass Base or Polyflex®
3. **Base Sheet:** Polyglass Base or Polyflex®
4. **Coverboard:** (by others)
5. **Insulation:** Polyglass Polytherm® ISO
6. **Roof Deck:** Heavy Gauge Steel or Structural Concrete

Guide Specifications

3-Ply Systems

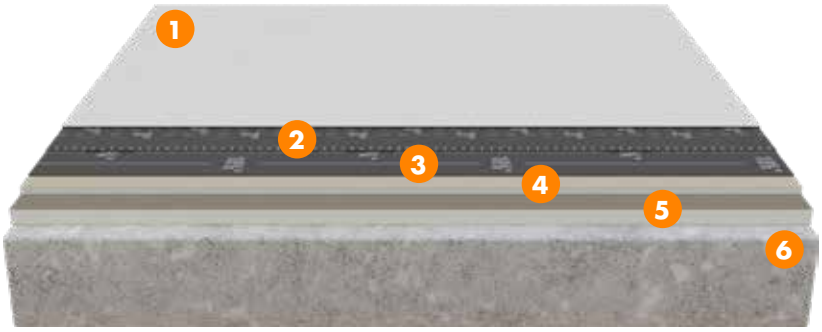

3-Ply Heat Welded SBS

1. **Cap Sheet:** Elastoflex S6 G or Elastoshield® TS G
2. **Interply Sheet:** Elastoflex S6 or Elastoshield® TS
3. **Base Sheet:** Elastoflex S6 or Elastoshield® TS
4. **Coverboard:** (by others)
5. **Insulation:** Polyglass Polytherm® ISO
6. **Roof Deck:** Heavy Gauge Steel or Structural Concrete

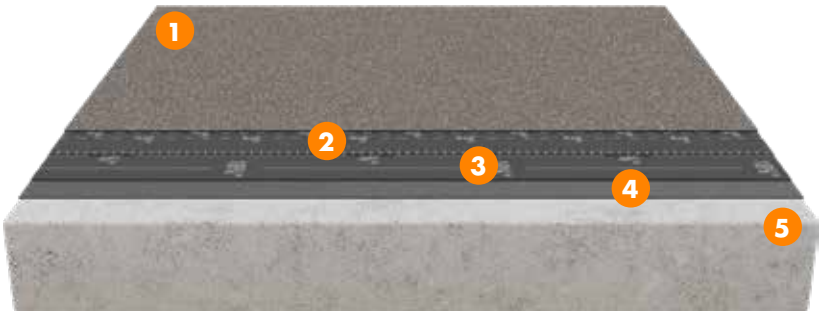

3-Ply Lightweight Heat Welded

1. **Cap Sheet:** Polyflex® G, Elastoflex S6 G or Polyfresko® G
2. **Interply Sheet:** Polyflex® or Elastoflex S6
3. **Base Sheet:** Polyflex® or Elastoflex S6
4. **Base Sheet:** Elastobase® or Elastovent™ (mechanically attached)
5. **Roof Deck:** Lightweight Insulation Concrete (LWIC of approved type)

Guide Specifications

3-Ply Systems

3-Ply Hot Mop

1. **Cap Sheet:** Elastoflex S6 G, Elastoflex S6 G HP or Elastoshield® TS G
2. **Interply Sheet:** Elastobase® or Elastoflex V or Elastoshield® TS
3. **Base Sheet:** Elastobase® or Elastoflex V or Elastoshield® TS
4. **Insulation:** Polyglass Polytherm® ISO (optional)
5. **Roof Deck:** Structural Concrete

Roofing Details

Skylight/Roof Hatch Detail (Typical)
PG-CURB-001

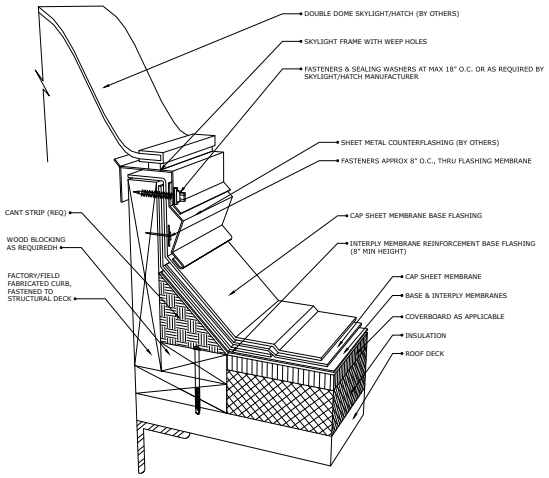

Notes:
- Attach wood nailer to wall/deck in accordance with FMRC guidelines, as per section 1-28, regarding windloads to roof systems and deck securement.
- Wood blocking may be slotted for venting of wet-fill decks or other applicable constructions.
- Extension of Polyglass field plies above head of cant, required. (Not shown for clarity.)
- Refer to SMACNA recommendations and details regarding metal thickness and cleat requirements.

Light/Medium Weight Equipment Curb
PG-CURB-002

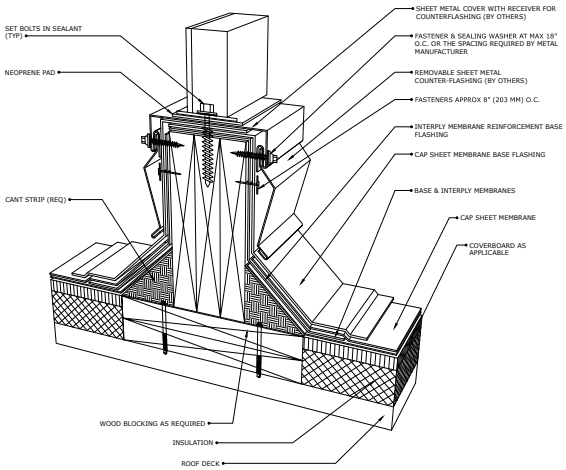

Notes:
- Attach wood nailer to wall/deck in accordance with FMRC guidelines, as per section 1-28, regarding windloads to roof systems and deck securement.
- Wood blocking may be slotted for venting of wet-fill decks or other applicable constructions.
- Extension of Polyglass field plies above head of cant, required. (Not shown for clarity.)
- Refer to SMACNA recommendations and details regarding metal thickness and cleat requirements.

Area Divider (Non-Structural)
PG-CURB-003

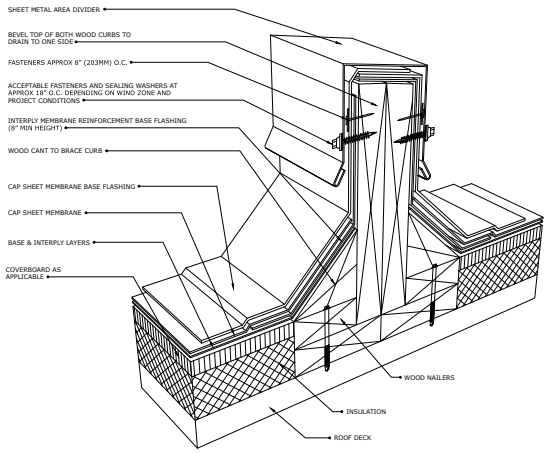

Notes:
- Wood blocking may be slotted for venting or wet-fill decks or other applicable constructions.
- Refer to SMACNA recommendation and details regarding metal thickness and cleat requirements.
- Polyglass recommends all roof edge terminations be designed and installed in accordance with ANSI/SPRI ES-1.

Roof Drain Detail (Typical)
PG-DRN-001

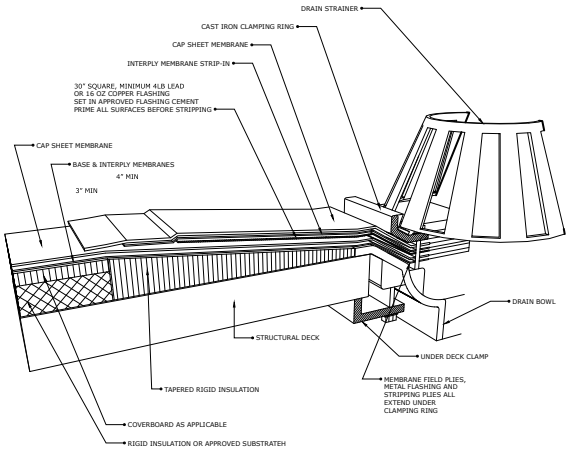

Notes:
- Wood blocking may be required at drain, depending on insulation thickness and type. (Not shown for clarity.)

Drip Edge Detail (Typical)
PG-EDGE-001

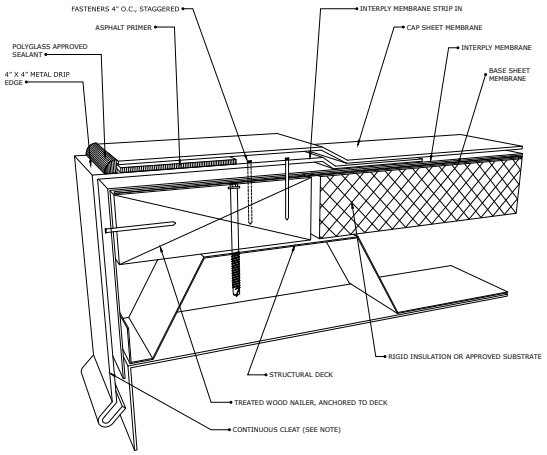

Notes:
- Metal edge flashing, wood blockings and attachments shall comply with ANSI/SPRI ES-1.
- For heat fused membrane applications, set metal flashing into softened membrane.

Edge Metal (Typical)
PG-EDGE-002

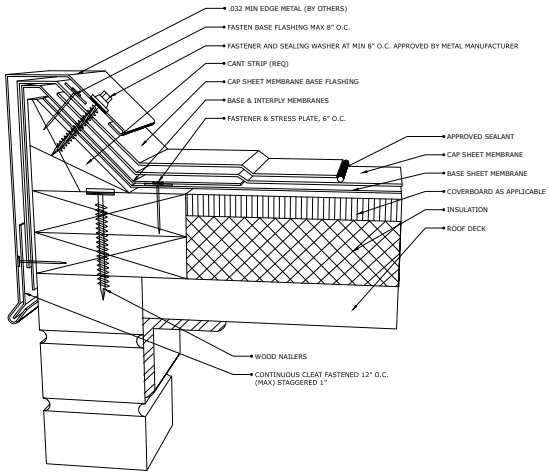

Notes:
- Metal edge flashing, wood blocking and attachments to comply with ANSI/SPRI ES-1.
- Heat fused membrane applications, set metal flashing into softened membrane.

Through-Wall Scupper (Typical)
PG-EDGE-004

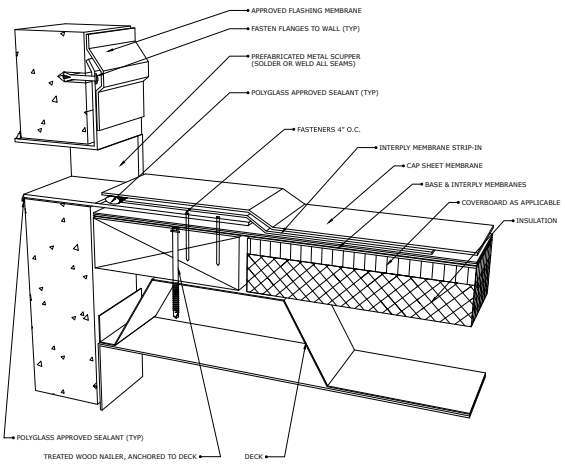

Notes:
- Wood blocking fastened per ANSI/SPRI ES-1 and project requirements.

Scupper Detail Through Raised Edge (Typical)
PG-EDGE-005

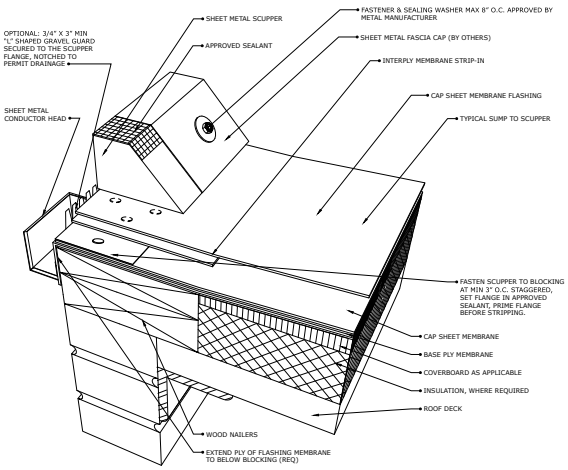

Notes:
- Attach wood nailer to wall/deck in accordance with FMRC guidelines, as per section 1-28, regarding windloads to roof systems and deck securement.
- Wood blocking may be slotted for venting of wetfill decks or other applicable constructions.
- Refer SMACNA recommendations and details regarding metal thickness.
- Polyglass recommends all roof edge terminations be designed and installed in accordance with ANSI/SPRI ES-1.

Roofing Details

Raised Perimeter Edge with Metal Flashing
PG-EDGE-006

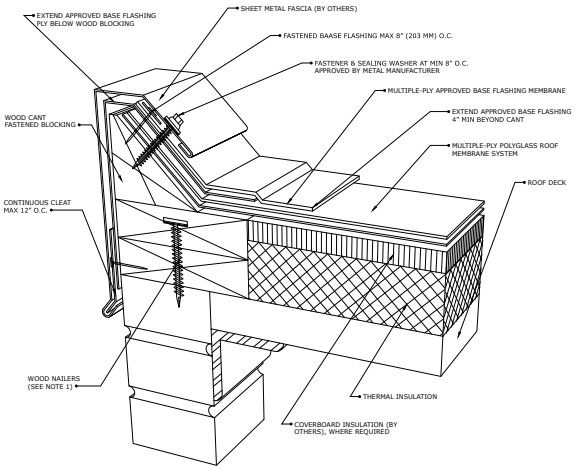

Notes:
- Attach wood nailer to wall/deck in accordance with FMRC guidelines, we per section 1-28, regarding windloads to roof systems and deck securement.
- Wood blocking may be slotted for venting of wet-fill decks or other applicable constructions.
- Polyglass recommends all roof edge terminations be designed and installed in accordance with ANSI/SPRI ES-1.

Expansion Joint with Pre-manufactured Cover (Typical)
PG-EXP-001

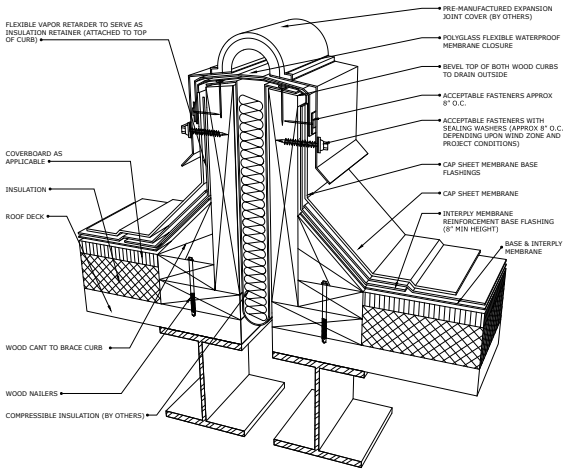

Notes:
- This detail should be used only when the roof deck is supported by the wall.
- Wood blocking may be slotted for venting of wet-fill decks or other applicable constructions.
- Refer to SMACNA recommendations and details regarding metal thickness and cleat requirements.
- Polyglass recommends all roof edge terminations be designed and installed in accordance with ANSI/SPRI ES-1.

Membrane Vent Pipe Flashing (Typical)
PG-PEN-001

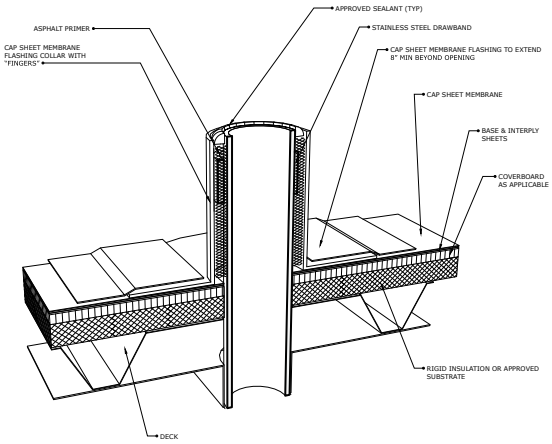

Notes:
- Detail only applicable for membrane field wrap applications.

Vent Pipe Flashing With Lead Sleeve
PG-PEN-002

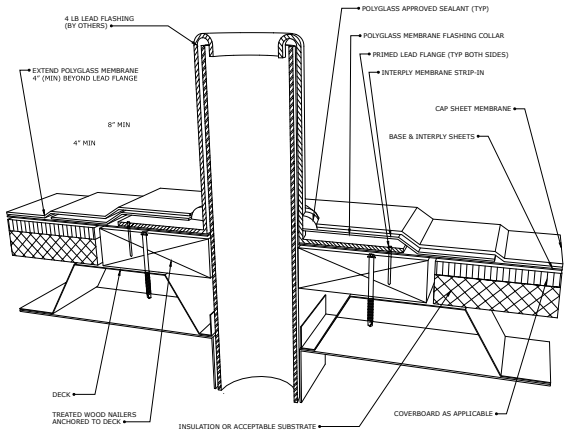

Notes:
- Lead flange must be set in approved flashing cement. Heat fused applications should set in softened membrane.
- Lead flashing should carry over and into vent pipe opening one inch.

Penetration Pocket Detail (Typical)
PG-PEN-003

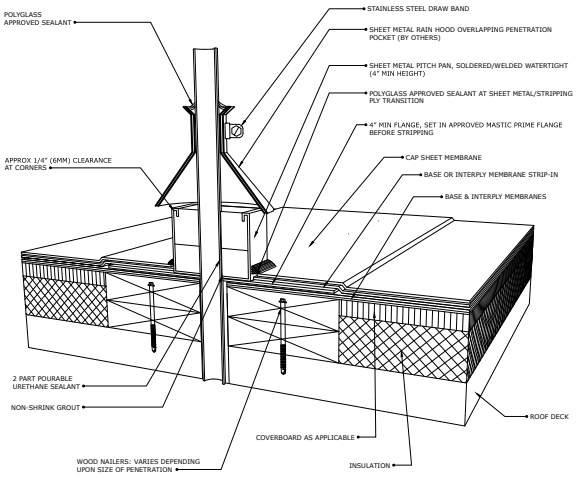

Notes:
- Attach wood nailer to wall/deck in accordance with FMRC guidelines, as per section 1-28, regarding windloads to roof systems and deck securement.
- Wood blocking may be slotted for venting of wet-fill decks or other applicable constructions.
- Refer to SMACNA recommendations and details regarding metal thickness.
- Polyglass recommends all roof edge terminations be designed and installed in accordance with ANSI/SPRI ES-1.

Equipment Support Stand with Rain Hood (Typical)
PG-PEN-004

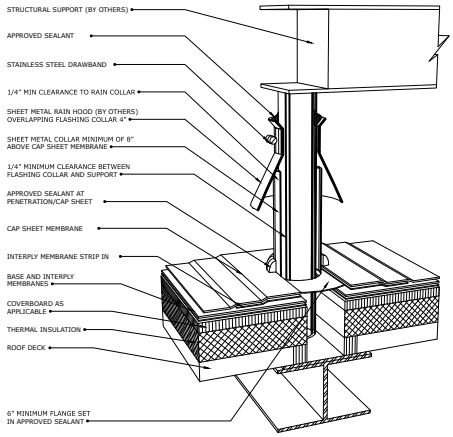

Notes:
- Attach wood nailer to wall/deck in accordance with FMRC guidelines, as per section 1-28, regarding windloads to roof systems and deck securement.
- Wood blocking may be slotted for venting of wet-fill decks or other applicable constructions.
- Polyglass recommends all roof edge terminations be designed and installed in accordance with ANSI/SPRI ES-1.

Rain Collar/Penetration Detail (Typical)
PG-PEN-005

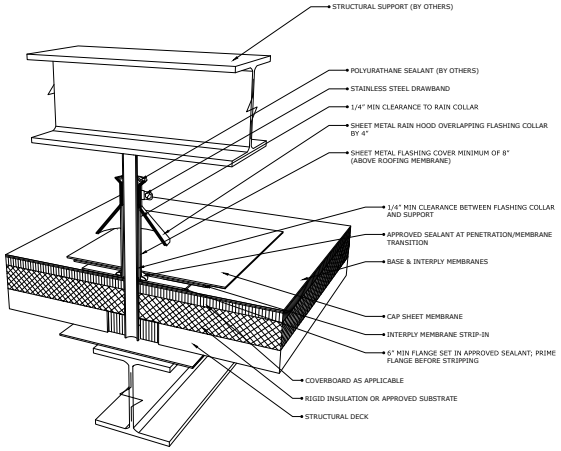

Notes:
- Attach wood nailer to wall/deck in accordance with FMRC guidelines, we per section 1-28, regarding windloads to roof systems and deck securement.
- Wood blocking may be slotted for venting of wet-fill decks or other applicable constructions.
- Polyglass recommends all roof edge terminations be designed and installed in accordance with ANSI/SPRI ES-1.

Base Flashing for Non-Wall Supported Deck
PG-WALL-001

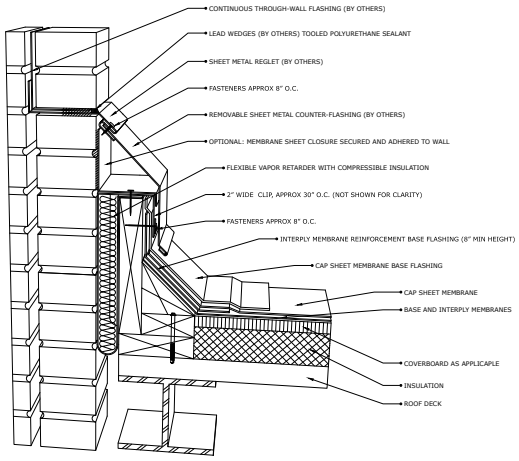

Notes:
- Attach wood nailer to wall/deck in accordance with FMRC guidelines, as per section 1-28, regarding windloads to roof systems and deck securement.
- Wood blocking may be slotted for venting of wet-fill decks or other applicable constructions.
- Polyglass recommends all roof edge terminations be designed and installed in accordance with ANSI/SPRI ES-1.

Roofing Details

Parapet Wall Base Flashing with Metal Coping (Typical) Wall Supported Deck
PG-WALL-002

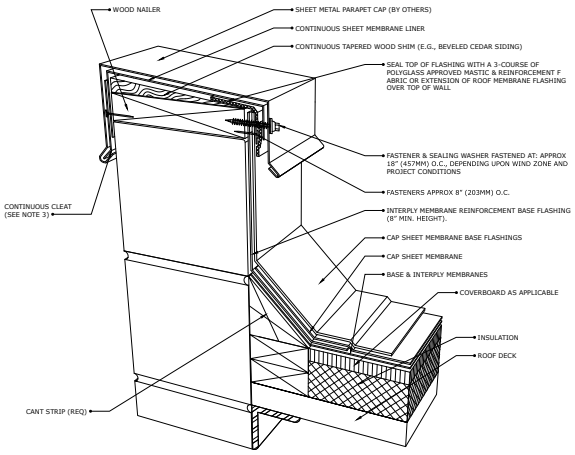

Notes:
- This detail should only be used when the roof deck is supported by the wall.
- Wood blocking may be slotted for venting of wet-fill decks or other applicable constructions.
- Refer to SMACNA recommendations and details regarding metal thickness and cleat requirements.
- Polyglass recommends all roof edge terminations be designed and installed in accordance with ANSI/SPRI ES-1.

Metal Coping Cap with Membrane Flashing (Typical)
PG-WALL-003

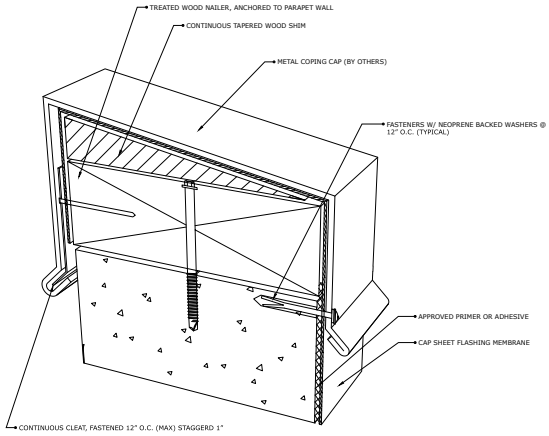

Notes:
- Continuous cleat is recommended to be at least one gauge heavier than the coping metal.
- Wood blocking may be slotted for venting of wet-fill decks or other applicable constructions.
- Refer to SMACNA recommendations and details regarding metal thickness and cleat requirements.
- Polyglass recommends all roof edge terminations be designed and installed in accordance with ANSI/SPRI ES-1.

Outside Corner Flashing Detail (Typical)
PG-WALL-004

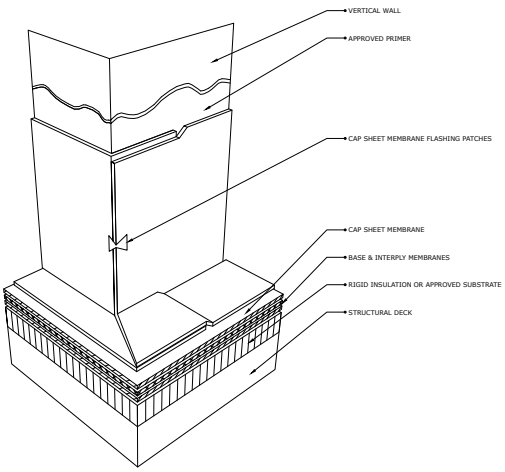

Notes:
- Membrane end laps must be a min. 6" and fully adhered at all membrane to membrane seams, and 3" min., where overlapped and adhered to a primed metal surface.

Inside Corner Flashing Detail (Typical)
PG-WALL-005

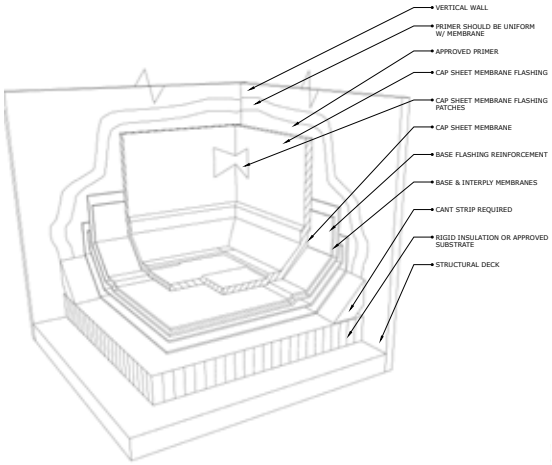

Notes:
- Membrane end laps must be a min. 6" and fully adhered at all membrane to membrane seams, and 3" min., where overlapped and adhered to a primed metal surface.

Velociflex Mechanically Attached Base Ply Fastening Pattern 6"

PG-BASE-003

ZONE 1

- ONE (1) ROW WITHIN THE CENTER OF THE SIDE LAPS SPACED AT 6″ O.C.

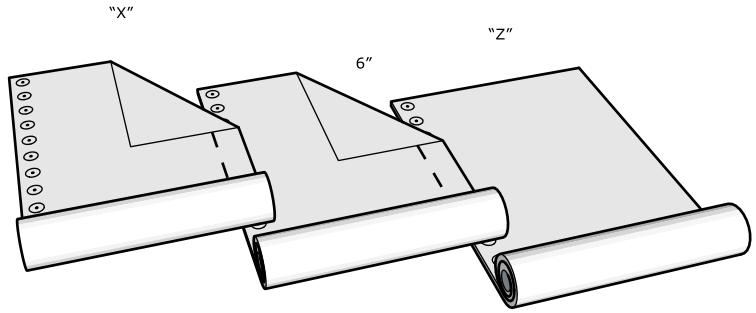

ZONE 2

- NOMINAL 60% OF FIELD ROW SPACING
- ONE (1) ROW WITHIN THE CENTER OF THE SIDE LAPS SPACED AT 6″ O.C.
- ONE (1) INTERMEDIATE ROW, WITH FASTENERS SPACED 6″ O.C. AND STAGGERED

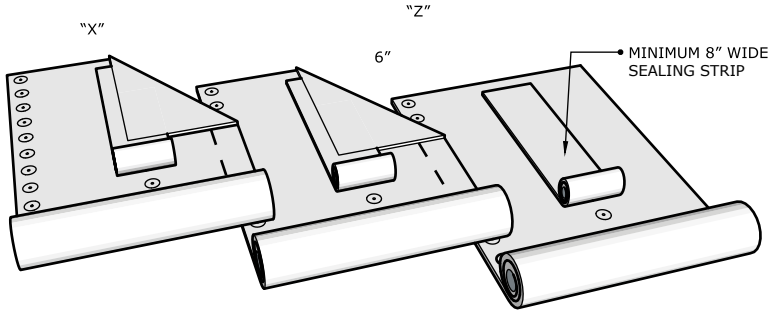

ZONE 3

- NOMINAL 40% OF FIELD ROW SPACING
- ONE (1) ROW WITHIN THE CENTER OF THE SIDE LAPS SPACED AT 6″ O.C.
- TWO (2) INTERMEDIATE ROWS, WITH FASTENERS SPACED 6″ O.C. AND STAGGERED

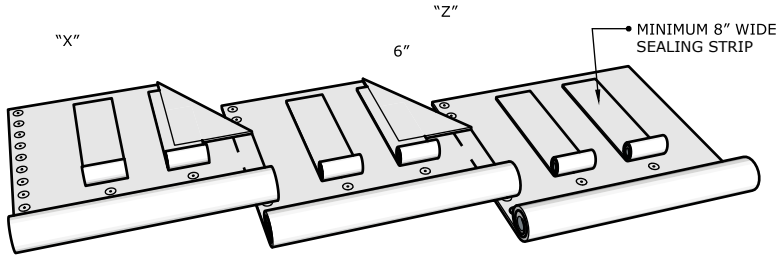

Roll Width (Y)	Lap Width (Z)	Zone	Pattern	Row Spacing (X)	Fasteners Per Square
39 in (1m)	4 in	1	6	35 in	69
		2	6, 6	17.5 in	138
		3	6, 6, 6	11.67 in	206
39 in (1m)	5 in	1	6	34 in	71
		2	6, 6	17 in	142
		3	6, 6, 6	11.33 in	212
39 in (1m)	6 in	1	6	33 in	73
		2	6, 6	16.5 in	146
		3	6, 6, 6	11 in	219

Roofing Details

Velociflex
Mechanically Attached Base
Ply Fastening Pattern 12"
PG-BASE-003

ZONE 1

- ONE (1) ROW WITHIN THE CENTER OF THE SIDE LAPS SPACED AT 12” O.C.

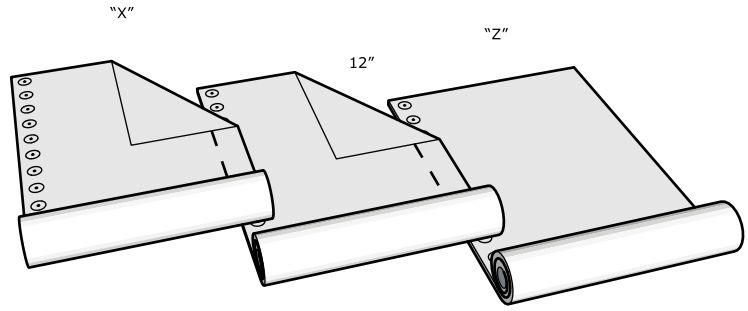

ZONE 2

- NOMINAL 60% OF FIELD ROW SPACING
- ONE (1) ROW WITHIN THE CENTER OF THE SIDE LAPS SPACED AT 12” O.C.
- ONE (1) INTERMEDIATE ROW, WITH FASTENERS SPACED 12” O.C. AND STAGGERED

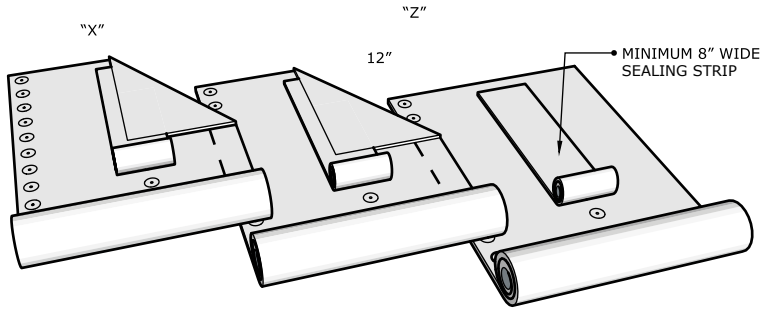

ZONE 3

- NOMINAL 40% OF FIELD ROW SPACING
- ONE (1) ROW WITHIN THE CENTER OF THE SIDE LAPS SPACED AT 12” O.C.
- TWO (2) INTERMEDIATE ROWS, WITH FASTENERS SPACED 12” O.C. AND STAGGERED

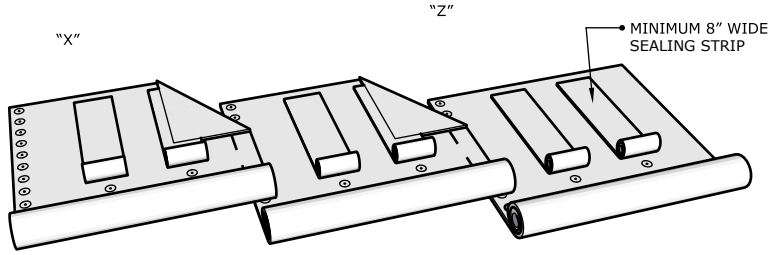

Roll Width (Y)	Lap Width (Z)	Zone	Pattern	Row Spacing (X)	Fasteners Per Square
39 in (1m)	4 in	1	12	35 in	35
		2	12, 12	17.5 in	69
		3	12, 12, 12	11.67 in	103
39 in (1m)	5 in	1	12	34 in	36
		2	12, 12	17 in	71
		3	12, 12, 12	11.33 in	106
39 in (1m)	6 in	1	12	33 in	37
		2	12, 12	16.5 in	73
		3	12, 12, 12	11 in	110

Velociflex Mechanically Attached Base Ply Fastening Pattern 18"

PG-BASE-003

ZONE 1

- ONE (1) ROW WITHIN THE CENTER OF THE SIDE LAPS SPACED AT 18" O.C.

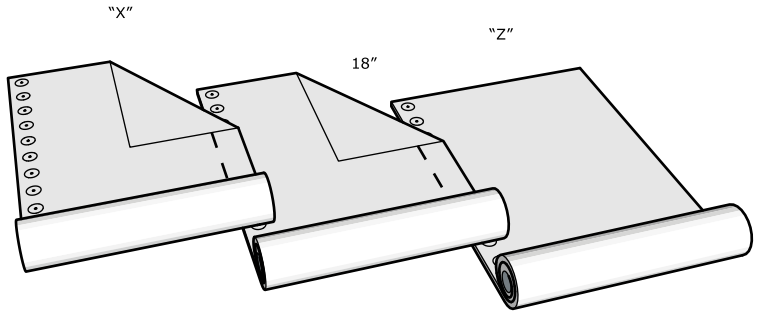

ZONE 2

- NOMINAL 60% OF FIELD ROW SPACING
- ONE (1) ROW WITHIN THE CENTER OF THE SIDE LAPS SPACED AT 18" O.C.
- ONE (1) INTERMEDIATE ROW, WITH FASTENERS SPACED 18" O.C. AND STAGGERED

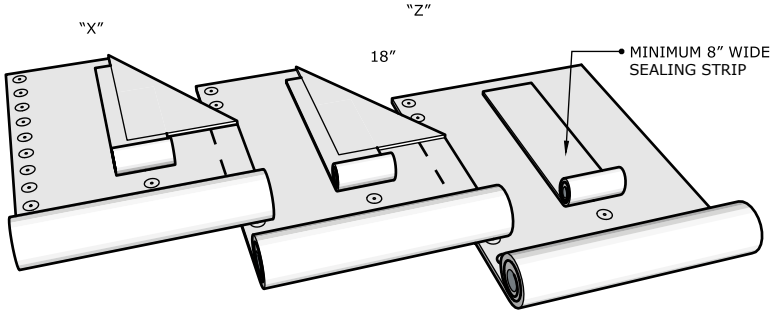

ZONE 3

- NOMINAL 40% OF FIELD ROW SPACING
- ONE (1) ROW WITHIN THE CENTER OF THE SIDE LAPS SPACED AT 18" O.C.
- TWO (2) INTERMEDIATE ROWS, WITH FASTENERS SPACED 18" O.C. AND STAGGERED

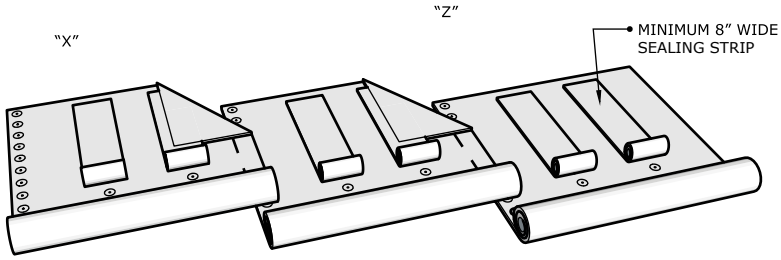

Roll Width (Y)	Lap Width (Z)	Zone	Pattern	Row Spacing (X)	Fasteners Per Square
39 in (1m)	4 in	1	18	35 in	23
		2	18, 18	17.5 in	46
		3	18, 18, 18	11.67 in	69
39 in (1m)	5 in	1	18	34 in	24
		2	18, 18	17 in	48
		3	18, 18, 18	11.33 in	71
39 in (1m)	6 in	1	18	33 in	25
		2	18, 18	16.5 in	49
		3	18, 18, 18	11 in	73

Roofing Details

Valley Flashing Detail
PG-VLY-001

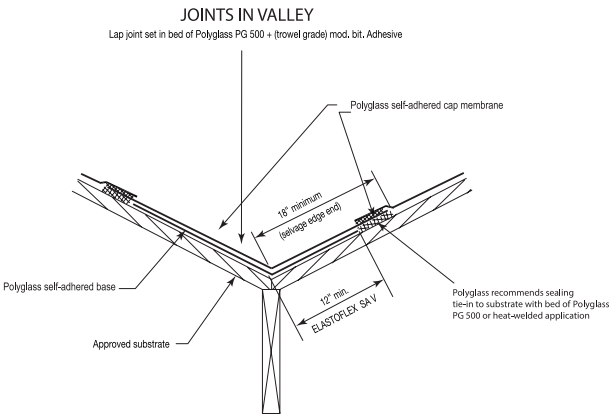

Notes:
- Valley to be lined with Elastoflex SA base sheet and ADESO Self-Adhered cap sheets to run parallel through the valley.
- All laps in valley or other laps of which occur over granulated materials, are to be set in bed of Polyglass PG 500 or approved trowel grade, modified asphalt adhesive.
- Valleys can be lined using the Polyglass membrane roll or metal flashing by others, consult Polyglass Technical Services for such applications.

Tie In Joint Flashing Detail
PG-VLY-002

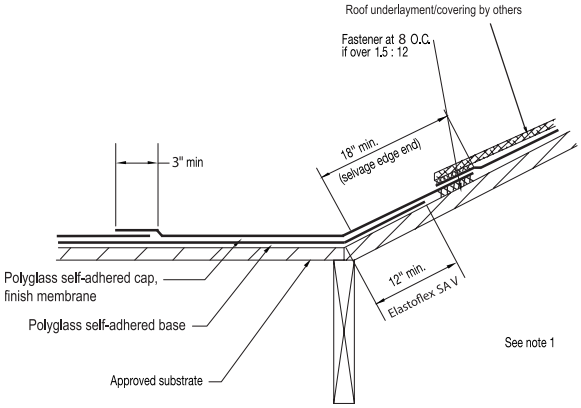

Notes:
- ADESO Polyflex SA P or Elastoflex SA P membrane to tie-in under steep-slope roofing system. Polyglass recommends sealing tie-in to substrate with bed of Polyglass PG 500 or heat-welded application.

One-Ply Base Flashing
PG-LF-1PLY-02

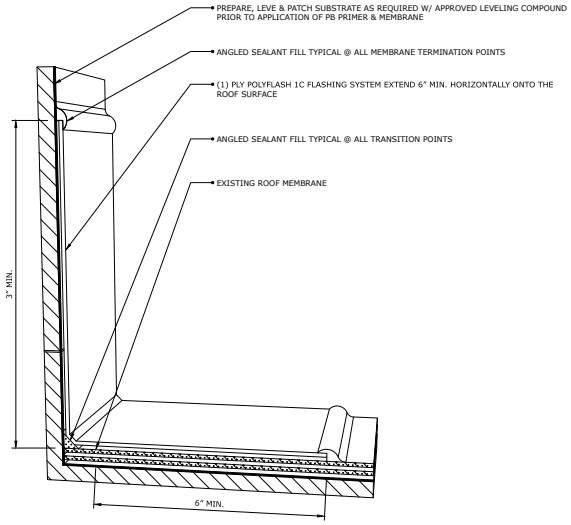

Notes:
- Cleaning and Preparation - Clean and prepare the surface by brooming, mild detergent & water rinse or as required to remove any conditions that could adversely affect adhesion of primers and liquid materials.
- Surfaces to received PolyFlash® 1C Flashing System may need to be primed, depending on the substrate
- PolyFlash 1C Flashing Systems consists of the following:
  - PolyFlash 1C base coat
  - PolyBrite Fabric
  - PolyFlash 1C surface coat
- Illustration and notations intended for generalized applications only. Please refer to Product Data Sheets for additional information.
- Urethane sealant for terminations shall be compliant with ASTM C920.
- If existing flashing is present, the PolyFlash 1C Flashing System should extend up to the existing counter flashing.

One-Ply Base Flashing
PG-LF-1PLY-03A

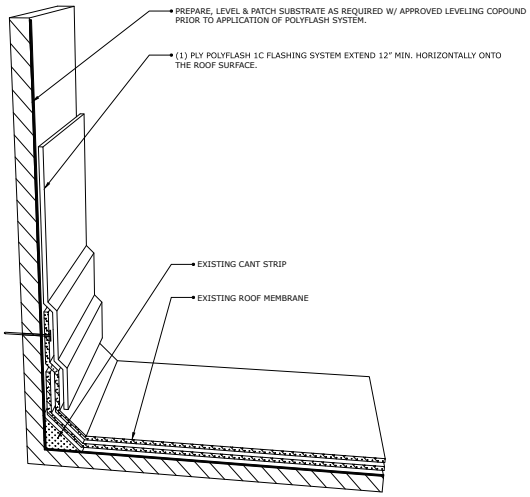

Notes:
- Cleaning and Preparation - Clean and prepare the surface by brooming, mild detergent & water rinse or as required to remove any conditions that could adversely affect adhesion of primers and liquid materials.
- Surfaces to received PolyFlash® 1C Flashing System may need to be primed, depending on the substrate
- PolyFlash 1C Flashing Systems consists of the following:
  - PolyFlash 1C base coat
  - PolyBrite Fabric
  - PolyFlash 1C surface coat
- Illustration and notations intended for generalized applications only. Please refer to Product Data Sheets for additional information.
- Urethane sealant for terminations shall be compliant with ASTM C920.
- If existing flashing is present, the PolyFlash 1C Flashing System should extend up to the existing counter flashing.

One-Ply Base Flashing
PG-LF-1PLY-03B

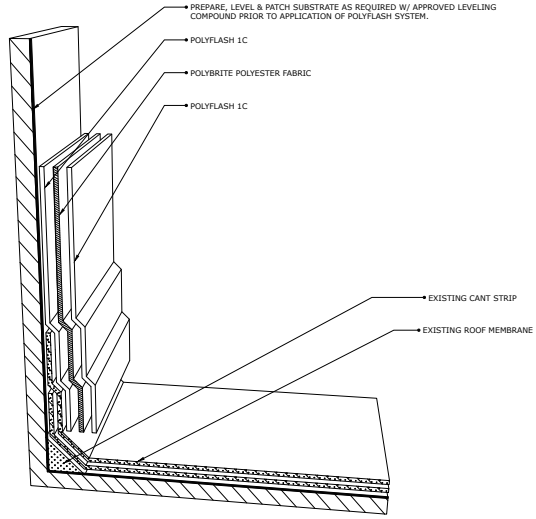

Notes:
- Cleaning and Preparation - Clean and prepare the surface by brooming, mild detergent & water rinse or as required to remove any conditions that could adversely affect adhesion of primers and liquid materials.
- Surfaces to received PolyFlash® 1C Flashing System may need to be primed, depending on the substrate
- PolyFlash 1C Flashing Systems consists of the following:
  - PolyFlash 1C base coat
  - PolyBrite Fabric
  - PolyFlash 1C surface coat
- Illustration and notations intended for generalized applications only. Please refer to Product Data Sheets for additional information.
- Urethane sealant for terminations shall be compliant with ASTM C920.
- If existing flashing is present, the PolyFlash 1C Flashing System should extend up to the existing counter flashing.

Roof Drain Flashing
PG-LF-DRAIN-01

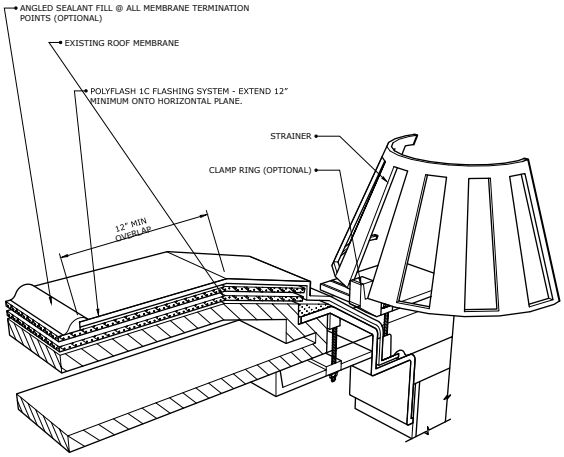

Notes:
- Cleaning and Preparation - Clean and prepare the surface by brooming, mild detergent & water rinse or as required to remove any conditions that could adversely affect adhesion of primers and liquid materials.
- Surfaces to received PolyFlash® 1C Flashing System may need to be primed, depending on the substrate
- PolyFlash 1C Flashing Systems consists of the following:
  - PolyFlash 1C base coat
  - PolyBrite Fabric
  - PolyFlash 1C surface coat
- Illustration and notations intended for generalized applications only. Please refer to Product Data Sheets for additional information.
- Urethane sealant for terminations shall be compliant with ASTM C920.

Field Fabricated Pipe Penetration Flashing
PG-LF-PEN-10

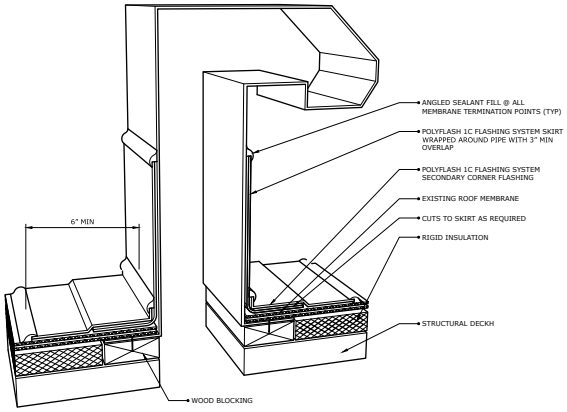

Notes:
- Cleaning and Preparation - Clean and prepare the surface by brooming, mild detergent & water rinse or as required to remove any conditions that could adversely affect adhesion of primers and liquid materials.
- Surfaces to received PolyFlash® 1C Flashing System may need to be primed, depending on the substrate
- PolyFlash 1C Flashing Systems consists of the following:
  - PolyFlash 1C base coat
  - PolyBrite Fabric
  - PolyFlash 1C surface coat
- Illustration and notations intended for generalized applications only. Please refer to Product Data Sheets for additional information.
- Urethane sealant for terminations shall be compliant with ASTM C920.
- PG recommends that all metal flashings in connection with PG Flashing System shall be designed and installed in compliance with ANSI/SPRI ES-1.

POLYGLASS U.S.A., Inc.
1111 West Newport Center Drive
Deerfield Beach, FL 33442
pgmarketing@polyglass.com
Customer Service: (800) 222-9782
Technical Services: (866) 794-9659

polyglass.us

© 2020 Polyglass U.S.A., Inc. All rights reserved.

2020-CPI-2500