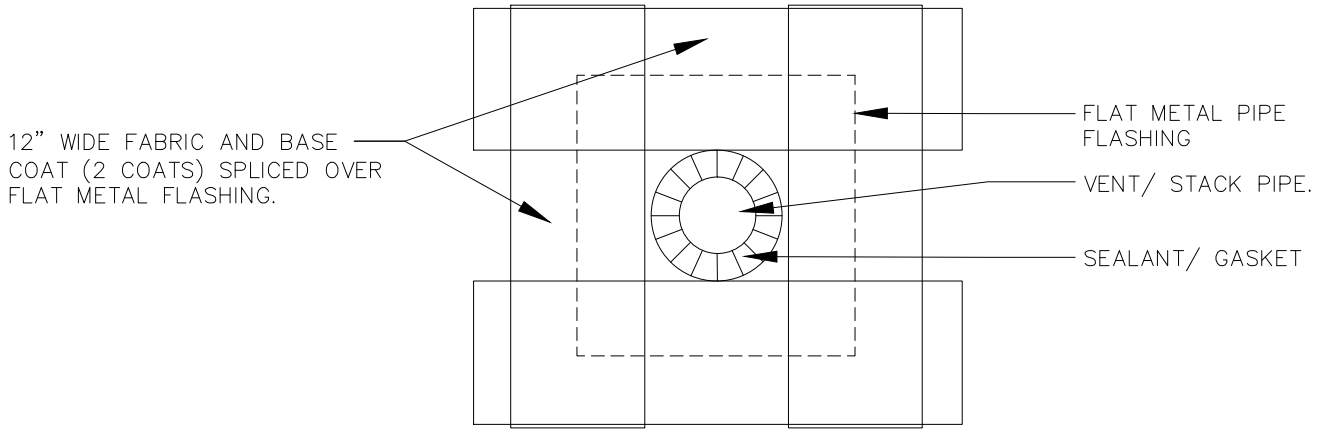

SECTION

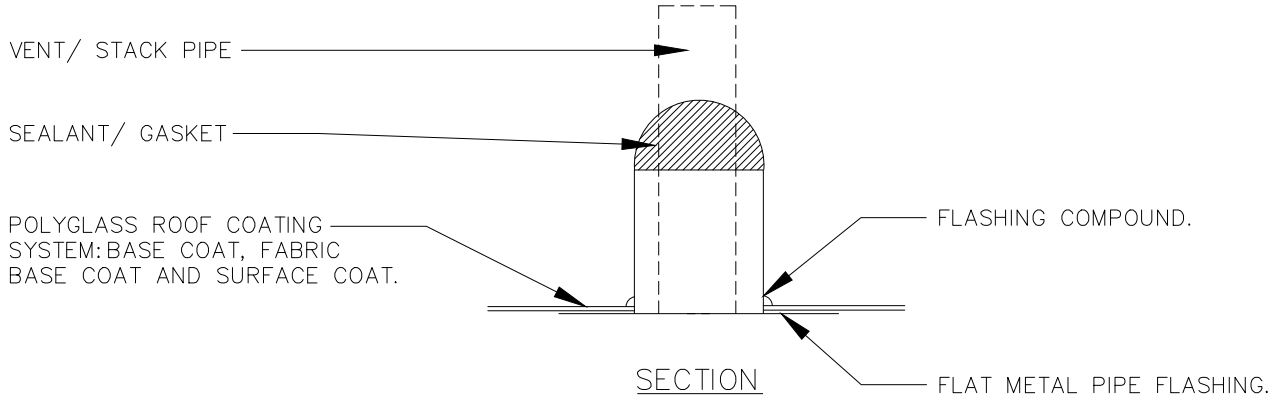

SECTION

• SURFACE COAT	POLYBRITE 70 OR PG 700 ELASTOMERIC ROOF COATINGS. APPLY A MINIMUM OF 2 COATS.
• BASE COAT	POLYBRITE 70, POLYBRITE 76, OR PG 700 ELASTOMERIC ROOF COATINGS. APPLY A MINIMUM OF 2 COATS.
• FLASHING COMPOUND	POLYBRITE 72 FLASHING COMPOUND AS REQUIRED. APPLY AT 1/8" THICK AND USE WITH POLYESTER REINFORCEMENT.
• POLYESTER	POLYBRITE REINFORCING POLYESTER.
• SURFACE PREPARATION	IF OXIDATION IS PRESENT, GRINDING AFFECTED AREAS WITH WIRE BRUSH IS NECESSARY. THEN PRIME ENTIRE ROOF WITH POLYBRITE 74 RUST INHIBITOR PRIMER APPLIED AT THE RATE OF 18–24 WET MILS (150–180 SQUARE FEET PER GALLON).

VENT/ STACK PIPE DETAIL	NUMBER: PG–VSP–001	ROOFING AND WATERPROOFING SYSTEMS POLYGLASS MAPEI GROUP
	DATE: MARCH 2014	www.polyglass.com